Smart Freight Centre

25 November 2026

Application of ISO 14083 and the GLEC Framework to Battery-Electric Freight Operations:

Guidance on Location-Based and Market-Based Electricity Accounting

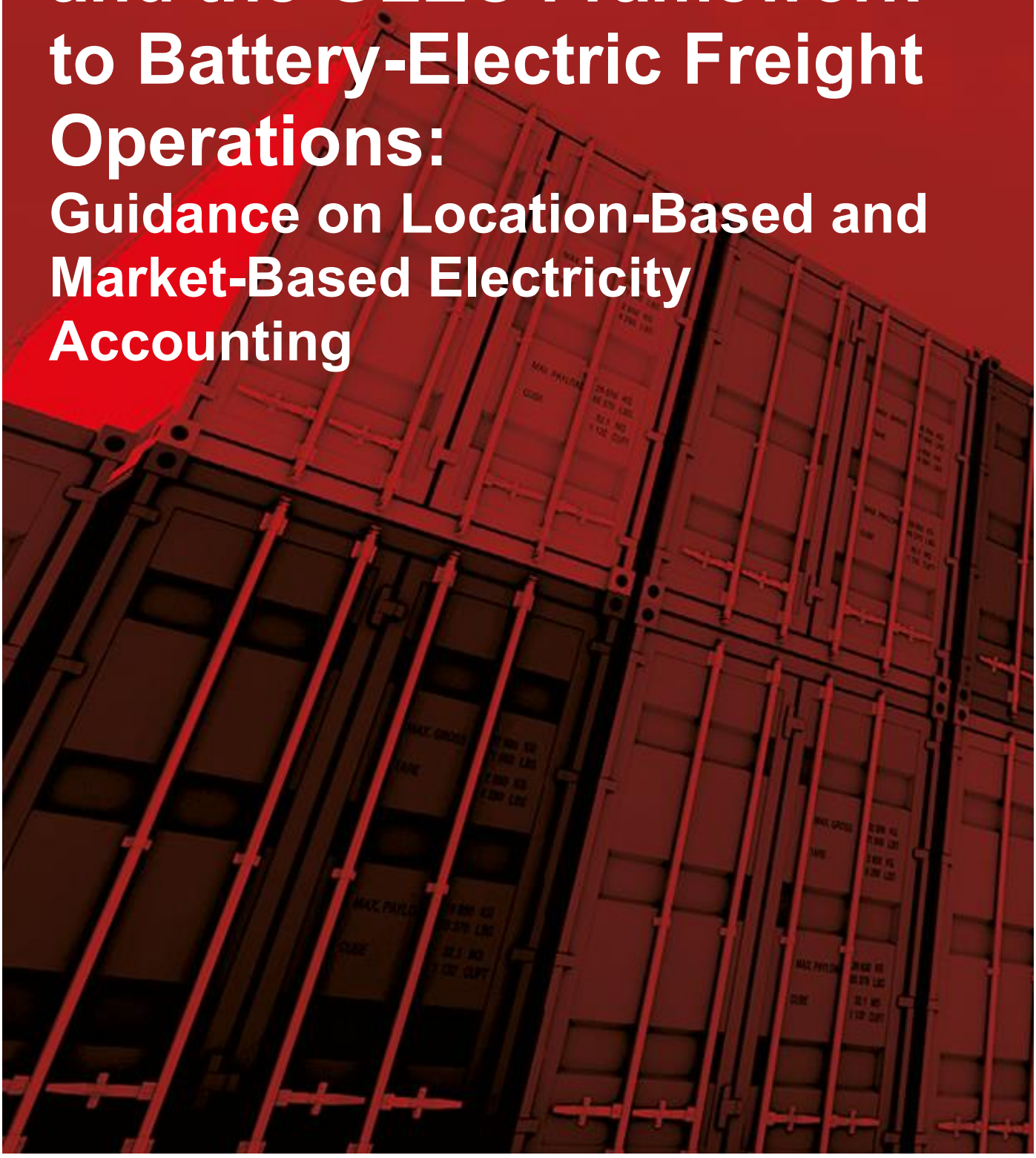

Contents

Executive summary 4
1. Introduction 6
1.1 Purpose 6
1.2 Scope 7
1.3 Document structure 7
2. Reporting Frameworks 8
2.1 GHG Protocol 8
2.2 ISO 14083 and the GLEC Framework 9
2.3 ISO 22095 series 10
2.4 MBM Framework 10
3. Calculation overview 11
3.1 Basic equations 11
3.2 Calculation approach 12
3.3 Roles and data responsibilities 12
4. Establish the TOC and transport activity 14
4.1 Definitions of TOCs which include BEV operations 14
4.2 Calculation of transport activity 14
5. Determine electricity consumption 17
5.1 Obtaining electricity consumption data 17
5.2 Adjustment to a common measurement point 19
5.3 Determine the quantity of contractual instruments required 20
6. Determine electricity emission factors 21
6.1 Emission factor requirements 21
6.2 Types of electricity emission factors 21
6.3 Adjusting emission factors 24
6.4 Location-based WTW emission factor 25
6.5 Market-based WTW emission factor 26
7. Calculate GHG emissions and emission intensity 27
8. Supporting information and disclosures 28
8.1 Supporting information 28
8.2 Quality criteria for market-based reporting 28
8.3 Additional requirements for attribution within physically linked electricity systems 29
9. Market-based electricity accounting use cases 30
9.1 Carrier-led electricity procurement and market-based claims 30
9.2 LSP/shipper-led electricity procurement and market-based claims 32
10. Case studies 35
10.1 Case study 1: Reporting based on carrier and CPO data 35
10.2 Case study 2: Reporting using modelled data 37
11. Conclusion 40
Glossary 42
Abbreviations 45
Units 45
Acknowledgements 47

Tables

Table 1 Potential TOC characteristics (Source: ISO 14083 Table F.1) 15
Table 2 Electricity consumption data sources (adapted from SFC 2023) 19
Table 3 Losses to account for when adjusting electricity consumption data to the vehicle battery boundary 20
Table 4 Lifecycle coverage and geographical scope of selected electricity emission factor sources. (Adapted from CLEVER (2025). “D2.3 Emission Factors Gap Analysis.”) 23
Table 5 Location- and market-based emission factors for the carrier’s and Milence’s sites 38
Table 6 Electricity, emissions and emission factors breakdown by month 38
Table 7 Electricity sources and the resulting emission factors of the hubs 39
Table 8 Comparison of the location-based and market-based reported emissions 41

Figures

Figure 1 GHG Protocol Scope categories for BEV-related GHG emissions depending on reporting entity 9
Figure 2 Four steps to calculate GHG emission intensity 13
Figure 3 TOC considerations including vehicle and energy attributes 15
Figure 4 Illustration of transport activity distance types (Green: loaded vehicle, Red: Empty running) 16
Figure 5 Schematic of energy flow from grid, on-site power generation and BESS to charging equipment and EVs 18
Figure 6 Example of location-based emission factor derivation 26
Figure 7 Example of market-based emission factor derivation 27
Figure 8 Carrier-led electricity procurement and market-based claims 33
Figure 9 LSP/shipper-led electricity procurement and market-based claims 34
Figure 10 Carrier’s electricity mix by month (Source: Reproduced with permission from Vlaamse Nutsregulator, https://www.vlaamsenutsregulator.be/groencheck) 37

Executive summary

Battery-electric vehicles (BEVs) are increasingly being deployed in road freight as companies seek to reduce greenhouse gas (GHG) emissions from transport. Unlike conventional vehicles, BEVs produce no direct GHG emissions during vehicle operation. Their well-to-wheel emissions therefore depend primarily on the electricity used for charging, including how that electricity is generated, supplied and accounted for.

As deployment grows, electricity supply arrangements are also becoming more diverse. BEVs may be charged using grid electricity, on-site renewable generation, battery energy storage systems or combinations of these sources. Carriers, charge point operators, logistics service providers and shippers may also procure renewable electricity or contractual instruments to support market-based electricity claims. These arrangements create additional considerations for calculating and reporting the emissions of BEV freight operations consistently.

This guidance builds on Smart Freight Centre's 2024 whitepaper, "Measuring and Reporting the Carbon Footprint of Electric Freight Vehicle Operations: Whitepaper" and provides practical guidance for applying ISO 14083:2023 and the GLEC Framework to BEV road freight operations. It focuses particularly on the treatment of electricity and provides practical considerations for applying the market-based approach to BEV freight operations, including the use of contractual instruments, electricity emission factors, residual mix and supporting evidence for market-based claims. The guidance provides practical interpretation rather than a normative specification.

The guidance covers the following topics:

- **Establishing transport activity and electricity consumption**, including the use of primary, modelled and default data and the definition of Transport Operation Categories.
- **Aligning electricity data to a common measurement point**, accounting where necessary for transmission and distribution, on-site distribution, battery storage and charging losses.
- **Determining well-to-wheel electricity emission factors**, covering grid electricity, on-site generation, contractual instruments and residual electricity mixes.
- **Applying location-based and market-based electricity accounting** consistently to the same transport activity, electricity consumption and reporting period.
- **Using contractual instruments for market-based reporting**, including their quality criteria, redemption and the treatment of electricity that is not covered by qualifying instruments.
- **Providing supporting information and disclosures** so that reported BEV emissions and associated electricity claims are transparent, comparable and traceable.

The calculation follows four main steps:

1. **Establish the Transport Operation Category and transport activity.**
2. **Determine electricity consumption**, including the electricity sources and applicable measurement boundary.
3. **Determine the electricity emission factors** for location-based and, where used, market-based accounting.
4. **Calculate GHG emissions and emission intensity** by applying the relevant well-to-wheel emission factors to electricity consumption and relating the resulting emissions to transport activity.

A key principle is that **electricity consumption and the corresponding emission factor need to represent the same measurement boundary**. Electricity data can be measured at different points, from the utility meter to the charging equipment and vehicle battery. The guidance therefore explains how energy quantities or emission factors can be adjusted to achieve a consistent basis for calculation.

The guidance gives particular attention to the **market-based approach**. ISO 14083 permits organizations to additionally report emissions based on electricity contractually purchased from specific generators, provided the applicable quality criteria are met. This guidance explains how contractual instruments can be incorporated into a BEV calculation. Where electricity is not covered by qualifying contractual instruments, the guidance recommends using an appropriate **residual mix emission factor**, where available, to reduce the risk of double counting electricity attributes already claimed by other consumers.

The guidance also recognizes that the data needed for BEV emissions calculations may be held by different organizations. Six use cases illustrate arrangements in which carriers, charge point operators, logistics service providers and shippers hold different combinations of charging data, electricity information and contractual instruments. These range from carrier-owned charging infrastructure with detailed primary data to situations where electricity consumption must be estimated from transport activity and secondary data.

Finally, two case studies illustrate how the methodology can be applied in practice. They demonstrate calculations using carrier and charge point operator data, on-site renewable generation, contractual instruments and modelled electricity consumption. Together, the examples show how the same core methodology can be applied across different operational and data-availability situations while maintaining transparent reporting of the underlying assumptions and electricity attributes.

1. Introduction

This document provides practical guidance on applying ISO 14083:2023[1] (henceforth referred to as ISO 14083) and the GLEC Framework[2] to the calculation and reporting of greenhouse gas (GHG) emissions from road freight operations using battery electric vehicles (BEVs). It builds on the earlier white paper by Smart Freight Centre (SFC), *Measuring and Reporting the Carbon Footprint of Electric Freight Vehicle Operations*, which introduced the main accounting concepts and considerations.

Three developments make an update necessary:

1. **Growing deployment of BEVs.** Transport operators and their customers are investing in BEVs to reduce the emissions in their corporate GHG inventories. As deployment grows, so does the need for consistent methods to calculate and report the associated emissions.
2. **Increasing demand for credible emission reporting.** BEV deployments require considerable investment and effort. Operators, shippers and other stakeholders therefore need transparent, standardized and comparable emissions data to assess the environmental benefits of these investments and report them credibly in line with ISO 14083..
3. **Diverse electricity supply arrangements.** Many electricity grids are not yet fully decarbonized, and the emissions associated with electricity consumption of BEVs can vary significantly. BEV operators are exploring different ways to incorporate renewable electricity to reduce these emissions. Where possible, operators are therefore relying more on on-site renewable generation paired with battery energy storage systems (BESS). Where physical supply is not possible or sufficient, they turn to contractual instruments.

The guidance provides SFC's interpretation of the standards for BEV operations making use of these diverse electricity supply arrangements. It explains how to account for electricity from different sources and under different procurement arrangements, including when renewable electricity can be reflected in reported emissions. The aim is to support consistent and credible reporting, whether renewable electricity is physically supplied to the vehicles or claimed through eligible contractual instruments.

1.1 Purpose

This guidance supports the consistent calculation and reporting of GHG emissions from BEV operations in line with ISO 14083:2023 and the GLEC Framework. It explains how to select and use electricity consumption data and emission factors, taking into account different electricity sources, supply arrangements and contractual instruments.

It is intended for carriers, logistics service providers, shippers, charge point operators (CPOs), and other parties involved in calculating, reporting or using emissions information.

This document provides practical interpretation rather than a normative specification. Unless explicitly attributed to a referenced standard, directive wording explains the application of the methodology and does not establish formal requirements.

[1] ISO. 2023. *Greenhouse Gases — Quantification and Reporting of Greenhouse Gas Emissions Arising from Transport Chain Operations*. ISO Standard No. 14083:2023. Version 1. March. https://www.iso.org/standard/78864.html.

[2] Smart Freight Centre. 2026. "Global Logistics Emissions Council Framework for Logistics Emissions Accounting and Reporting; v3.3 Edition, Revised and Updated." October.

1.2 Scope

This guidance applies specifically to the use of BEVs in road freight operations. Other electric powertrains, including fuel-cell electric vehicles or the many varieties of hybrid electric vehicles, are outside the scope of this guidance.

The guidance covers the following areas:

- Calculation of GHG emissions and emission intensity values at the Transport Operation Category (TOC) level;
- Accounting for energy charged at carrier-, shipper-, or third-party-operated charging infrastructure;
- Deriving ISO 14083 well-to-wheel GHG emission factors for electricity under different energy supply arrangements;
- Applying location-based and market-based emission factors, including supplier-specific factors, contractual instruments, and residual mix factors;
- Providing the supporting information and disclosures needed to make reported results transparent, comparable, and traceable.

This guidance is limited to BEV operations for which the physical use of BEVs can be linked to the reported transport activity. Market-based chain-of-custody models at the transport layer, such as mass balance and Book and Claim, fall outside its scope. They are addressed separately in Smart Freight Centre's *Voluntary Market Based Measures Framework for Logistics Emissions Accounting and Reporting* (the MBM Framework)[3]. The principles in this guidance may still be applied to calculate the emissions of the underlying BEV transport activity where the resulting emissions information is subsequently used within a market-based chain of custody.

1.3 Document structure

The document follows five stages:

- **Framework and scope (Section 2):** establishes the reporting frameworks, principles and roles.
- **Calculation methodology (Sections 3–7):** covers the calculation from transport activity and electricity use through to GHG emissions and emission intensity.
- **Supporting information and disclosures (Section 8):** sets out the information needed to support transparent and traceable reporting.
- **Practical application (Section 9):** illustrates how the methodology applies in different use cases.
- **Examples** (**Section 10):** presents illustrative examples of applying the guidance.

[3] Smart Freight Centre. 2023. "Voluntary Market Based Measures Framework for Logistics Emissions Accounting and Reporting." June 21. https://smart-freight-centre-media.s3.amazonaws.com/documents/SFC_MBM_FRAMEWORK_2023__27_6_23.pdf.

2. Reporting Frameworks

Several reporting and accounting frameworks are relevant to GHG emissions from BEV operations. They serve different purposes and apply different accounting boundaries. This guidance uses ISO 14083 and the GLEC Framework as the primary basis for calculating lifecycle GHG emissions from transport operations. It considers these within the broader context of corporate reporting under the GHG Protocol, namely its requirements for Scope 2 and Scope 3 emissions.

The following sections describe the role of each standard and explain how they relate to one another. It also introduces the ISO 22095, as a standard that may provide relevant rules for market-based electricity accounting, and the MBM Framework, as a framework that uses transport emissions information for book-and-claim at the transport layer.

2.1 GHG Protocol

The GHG Protocol provides the overarching structure for corporate GHG accounting and reporting. It organizes emissions into Scope 1, Scope 2 and Scope 3, according to the reporting company's activities and its relationship to the sources of emissions.

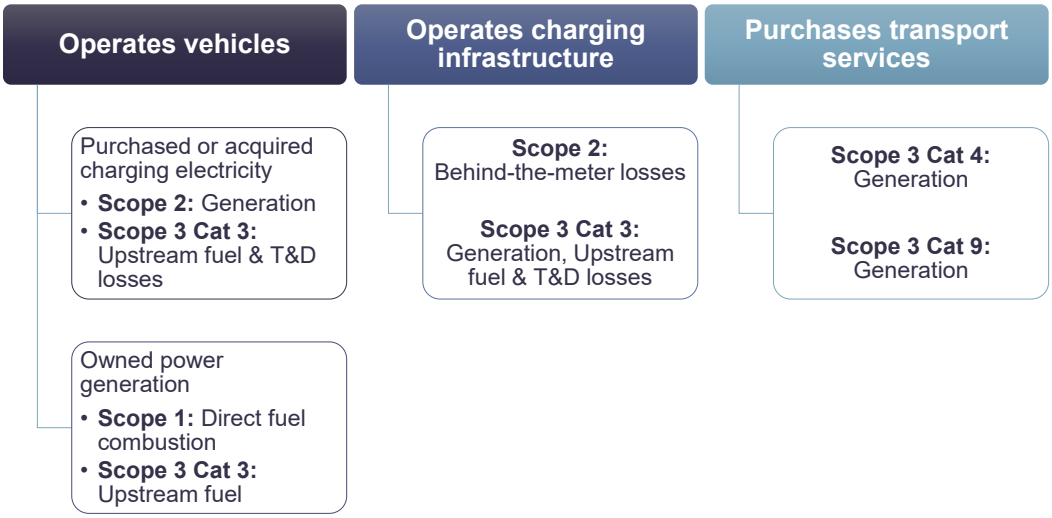

Figure 1 GHG Protocol Scope categories for BEV-related GHG emissions depending on reporting entity

For electricity used in transport operations, its treatment depends on the reporting entity and how it obtains and uses the electricity (Figure 1). A carrier that acquires electricity for charging reports the emissions from electricity generation in Scope 2, while associated upstream emissions from producing the fuels used to generate that electricity, together with emissions associated with transmission and distribution losses, are reported in *Scope 3 Category 3, Fuel- and Energy-Related Activities Not Included in Scope 1 or Scope 2* (Scope 3 Cat 3).

The GHG Protocol Scope 2 Guidance distinguishes between two methods for accounting for purchased or acquired electricity:

- **Location-based method:** reflects the average emissions intensity of electricity grids within a defined geographic area.
- **Market-based method:** reflects emissions associated with the electricity products or contractual instruments that a company has purposefully chosen, or the residual electricity mix where applicable. Contractual instruments used for this method must meet the GHG Protocol Scope 2 Quality Criteria.

Electricity generated and consumed from sources owned or controlled by the reporting entity is outside Scope 2 because it is not purchased or acquired from another entity. Direct GHG emissions from owned or controlled generation, such as emissions from fuel combustion, fall within Scope 1. Relevant upstream fuel- and energy-related emissions may fall within Scope 3 Cat 3.

Companies purchasing third-party transport services, including shippers and logistics service providers, report the associated transport emissions in the applicable Scope 3 transportation and distribution category: *Category 4, Upstream Transportation and Distribution* (Scope 3 Cat 4), or *Category 9, Downstream Transportation and Distribution* (Scope 3 Cat 9), depending on the relationship of the transport activity to the reporting company.

2.2 ISO 14083 and the GLEC Framework

ISO 14083 provides a common methodology for quantifying and reporting GHG emissions arising from transport-chain operations. The GLEC Framework, now in its version 3.3, is aligned with ISO 14083 and provides practical guidance for applying it to logistics emissions accounting.

It contrasts the scopes approach used in the GHG Protocol in two main ways. Firstly, it takes a lifecycle perspective on the energy consumed in these operations, covering emissions from energy use in the vehicle as well as energy production and supply, which in the GHG Protocol is only included in Scope 3 Cat 3. Further, the calculation includes emissions associated with all electricity consumed in the transport operation, regardless of whether it comes from the grid or on-site generation. The GHG Protocol splits this to the Scope 2 and Scope 1, respectively.

ISO 14083 provides two approaches to calculating electricity-related emissions:

- **Location-based approach:** uses average GHG emission factors for energy generation in defined geographic locations. It reflects the emissions intensity of the electricity system supplying the location where the BEV is charged.
- **Market-based approach:** uses GHG emission factors associated with the generators from which the reporting organization contractually purchases energy, in accordance with the standard's quality criteria outlined in its Annex J.3 (ISO 14083, p. 85).

Like the Scope 2 Standard, the location-based approach is mandatory, while the market-based approach is optional. If the results are used for a product carbon footprint in accordance with ISO 14067, the market-based electricity mix shall also be reported.

While ISO 14083 provides a market-based approach for electricity that is contractually purchased from specific generators, it does not prescribe how to account for other forms of market-based allocation. These include arrangements where environmental attributes are allocated separately from the physical flow of electricity, including electricity generated by owned energy assets, such as on-site renewable generation, or stored in BESS. Such attributes may be allocated through mass-balance or book-and-claim chain-of-custody models.

For these arrangements, reporting entities may be requested to provide additional evidence demonstrating that the allocation of environmental attributes conforms to relevant chain-of-custody standards and associated eligibility and quality requirements.

2.3 ISO 22095 series

ISO 22095:2020, as amended by Amendment 1:2026[4], provides a generic framework for chain-of-custody (CoC) systems. It establishes common terminology, general requirements and guidance for designing, implementing and managing different CoC models across value chains. The ISO 22095 series also provides model-specific requirements and guidance. ISO 22095-2:2026[5] addresses the mass balance model, while ISO 22095-3:2026[6] addresses the book and claim model. These standards provide more detailed requirements for applying the respective CoC models, including the tracking and allocation of specified attributes.

These models are relevant to accounting for renewable electricity attributes associated with BEV charging, including arrangements involving on-site generation and BESS.

2.4 MBM Framework

The MBM Framework, provides an accounting approach for allocating the emission profiles of low-emission transport solutions, such as BEV transport, and transport services across transport supply chains. It describes how market-based chain of custody approaches like Book and Claim and Mass Balance can support the allocation of emissions and environmental attributes at the solution and transport-service levels.

BEV emissions calculated under this guidance may subsequently be used for Book and Claim accounting under the MBM Framework. However, the requirements and specifications for applying those results under the MBM Framework are outside the scope of this guidance.

[4] ISO. 2020. Chain of Custody — General Terminology and Models. ISO 22095:2020, including Amendment 1:2026.
[5] ISO. 2026. Chain of Custody — Part 2: Requirements and Guidelines for Mass Balance. ISO 22095-2:2026.
[6] ISO. 2026. Chain of Custody — Part 3: Requirements and Guidelines for Book and Claim. ISO 22095-3:2026.

3. Calculation overview

This chapter provides an overview of how electricity use and transport activity are combined to calculate the GHG emissions and emission intensity of a Transport Operation Category (TOC) under this guidance. The subsequent sections explain the detailed calculation methods.

As the derivation of emission intensity factors is the main focus of this guidance, due to the reasons outlined in the introduction, it stops short of applying the resulting emission intensity to individual transport chain elements. Readers are referred to the GLEC Framework for general guidance on calculating transport emissions and how emission intensity values are applied.

3.1 Basic equations

GHG emissions (***GHG***) can be disaggregated into:

- well-to-tank (WTT) emissions; referred to as energy provision GHG emissions within ISO 14083, and
- tank-to-wheel emissions (TTW); referred to as operational GHG emissions within ISO 14083

$$GHG_{WtW} = GHG_{WtT} + GHG_{TtW}$$

The operation of BEV does not produce direct emissions, meaning that the tank-to-wheel emissions are zero ($GHG_{TtW} = 0$). Therefore the total well-to-wheel emissions are entirely dependent on the emissions from the well-to-tank portion ($GHG_{WtW} = GHG_{WtT}$).

The GHG emissions of the TOC are calculated by multiplying the energy consumption data associated with the TOC over the reporting period by the corresponding WTW emission factor (EF). This calculation should be performed separately for the location-based and market-based approaches.

GHG emissions intensity is then calculated by dividing the GHG emissions of the TOC and the transport activity of the TOC.

3.1.1 Location-based approach

For the location-based approach, the TOC's electricity consumption is multiplied by the corresponding WTW emission factor of the location calculated in Section 6.4.

$$GHG_{WtW,location} = \sum_{location} (E_{location} * EF_{WtW,location})$$

Where:

- $GHG_{WtW,location}$ = total GHG emissions, in gCO_2e, of the TOC under the location-based approach
- $E_{location}$ = electricity use associated with the TOC, expressed in kWh, over the same measurement boundary as the emission factor
- $EF_{WtT,location}$ = location-based WTW emission factor, expressed in gCO_2e/kWh

3.1.2 Market-based approach

For the market-based approach, the TOC's electricity consumption is multiplied by the market-based and residual grid mix WTW emission factor calculated in Section 6.5.

$$GHG_{WtW,market} = \sum_{CI} (E_{CI} * EF_{WtW,CI}) + \sum_{RES} (Energy_{RES} * EF_{WtW,RES})$$

Where:

- $GHG_{WtW,market}$= total GHG emissions, in gCO_2e, of the TOC under the market-based approach
- E_{CI} = electricity use, in kWh, with eligible contractual instrument,
- E_{RES} = electricity use, in kWh, without eligible contractual instrument
- $EF_{WtW,CI}$, $EF_{WtW,RES}$ Emission factor of the contractual instrument and the relevant residual grid mix, expressed in g CO_2e/kWh

The total energy consumption reported under the location-based and market-based approaches should be the same. Only the weighted-average emission factor differs, reflecting the different emission factors applied to each electricity source or contractual-instrument category.

3.2 Calculation approach

The calculation of GHG emission intensity requires three inputs: **transport activity, electricity consumption and electricity emission factors**. These inputs should cover the same TOC and reporting period. Under ISO 14083, a TOC comprises a group of transport operations with shared characteristics that could have a material impact on emission performance. The measurement boundary of the electricity data should match that of the emission factors.

The calculation follows four steps, as illustrated in Figure 2

Step 1: Establish the TOC and transport activity. Define the operations included in the TOC, the reporting period, and the corresponding transport activity, normally expressed in tonne-kilometers. Section 4 explains this step.

Step 2: Determine electricity consumption. Establish the electricity consumed by the operations within the TOC. Identify the relevant electricity sources and define the measurement boundary, including any applicable energy losses. Section 5 explains this step.

Step 3 – Determine electricity emission factors
Calculate the relevant WTW emission factors for location-based and market-based accounting. Section 6 explains this step.

Step 4 – Calculate GHG emissions and emission intensity
Apply the relevant emission factors to electricity consumption to calculate total well-to-wheel (WTW) GHG emissions. Divide these emissions by the corresponding transport activity to determine the TOC's GHG emission intensity. Section 7 explains this step.

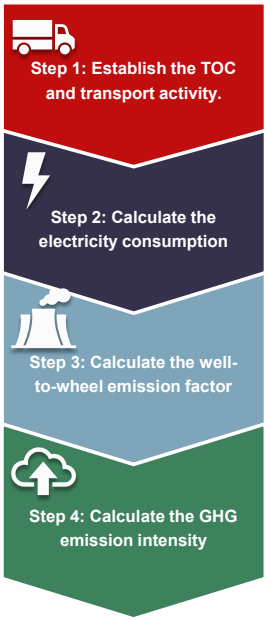

Figure 2 Four steps to calculate GHG emission intensity

3.3 Roles and data responsibilities

The calculation of GHG emission from BEV transport requires data on transport activity, electricity consumption and the associated emission factors. The last two vary widely within the electricity supply infrastructure and commercial arrangements used across road freight. Accurate reporting therefore depends on operational data from the organizations that supply electricity and deliver transport services. Sharing this data helps ensure that emission calculations reflect the actual energy use and electricity supply arrangements associated with transport operations, rather than relying on generic assumptions or default values.

The following roles identify the organizations that contribute to the calculation and the provision of supporting data. They help clarify who is responsible for collecting, calculating, reporting and

verifying the information needed. Roles may overlap within one organization, and their allocation across the industry is not yet fully established.

The first three roles are commonly involved in data collection and GHG emissions calculations under ISO 14083. This guidance uses the more familiar industry terms carrier, logistics service provider (LSP) and shipper, while retaining the corresponding ISO 14083 terminology in brackets for clarity.

- **Carrier (transport operator):** carries out the transport operations and normally calculates and reports the emissions and emission intensity of the Transport Operation Category (TOC).
- **LSP (transport service organizer):** arranges transport services and may subcontract some or all transport operations to carriers. This role may also be performed by a freight forwarder.
- **Shipper (transport service user):** purchases or uses transport services to move goods.

This guidance also distinguishes two electricity-related roles, because the electricity delivered at a charge point and the environmental attributes claimed for it do not always come from the same party.

- **Charge point operator (CPO):** Operates the charging infrastructure and may provide data on electricity consumption, the associated electricity supply and emission factors. A carrier, LSP, or shipper operating charging infrastructure on its premises can also act as CPO. Other parties involved in charging services, such as electric mobility service providers (eMSPs) or the more commonly known fuel card service providers, that facilitate access to charging infrastructure and payment, may also provide relevant consumption data.
- **Contractual instrument purchaser:** acquires contractual instruments to support market-based electricity claims by the carrier. While this could typically be the carrier or the CPO, other LSPs and Shippers could also play this role.

4. Establish the TOC and transport activity

A **TOC** is comprised of a group of associated operations that share the same characteristics that could have a material impact on performance. TOCs are formed to reflect the transport operations of each transport chain element so that later in the calculation a relevant and accurate emission intensity can be associated with each part of a consignment's journey.

4.1 Definitions of TOCs which include BEV operations

It is for the carrier, potentially in discussion with its customer(s) to decide the exact TOC specification. Table 1 shows the main issues that should be considered when defining and differentiating between TOCs, although other issues may also be relevant. As an example, a company that specializes in long distance liquid bulk transport could define its TOCs by grouping according to the vehicle size class and temperature condition of the product.

Table 1 Potential TOC characteristics (Source: ISO 14083 Table F.1)

Freight type	Condition	Journey type	Contract type
Dry bulk Liquid bulk Containerized Palletized Vehicle transport Mass-limited, general freight (heavy cargo) Volume-limited, general freight (light cargo)	Ambient Temperature-controlled	Point-to-point long-haul Collection and delivery	Shared transport Dedicated contract (charter)

In addition to the characteristics above, since the provision of low emission transport services is emerging as a service category, the TOC can be further defined by the vehicle and energy attributes (Figure 3). The choice of TOC should be meaningful and relevant for the carrier and their clients[7].

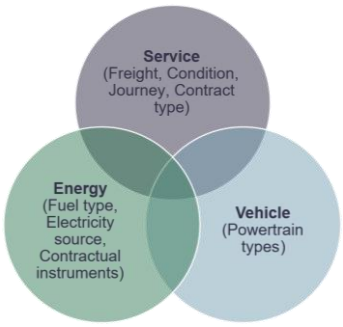

Figure 3 TOC considerations including vehicle and energy attributes

For example, if the necessary input data is available, and it is considered useful to break it down to great detail, a carrier operating the same freight service could define separate TOCs for:

- Mix of diesel and BEVs
- BEVs only, charged with on-site renewable electricity;
- BEVs only, charged with grid electricity with contractual instruments;
- BEVs where only part of the associated electricity is with contractual instruments.

This differentiation is useful when the carrier or its customers wish to report distinct emission intensities for conventional transport, BEV transport, and BEV transport supported by renewable electricity claims. Wherever a TOC includes contractual instruments, the reporting entity must still follow the aforementioned requirement of reporting both location-based and market-based results.

4.2 Calculation of transport activity

The transport activity of a TOC is the total transport activity of all the individual consignments transported as part of that TOC. It is calculated by multiplying each consignment's actual mass by the transport activity distance.

[7] These aspects may already be aligned with the terms of the contract between the transport operator and its customer and hence be reflected if a dedicated contract forms part of the TOC definition.

4.2.1 Transport activity distance

ISO 14083 allows two transport activity distance types for road transport: the Shortest Feasible Distance (SFD), which is “the distance achievable by the shortest practical route available according to the infrastructure options”, and the Great Circle Distance (GCD), the shortest distance between two points on a sphere. The GLEC Framework prefers the SFD.

Figure 4 illustrates how these two types differ from the planned route of a BEV, which is typically produced by routing software and stored in a transport management system (TMS).

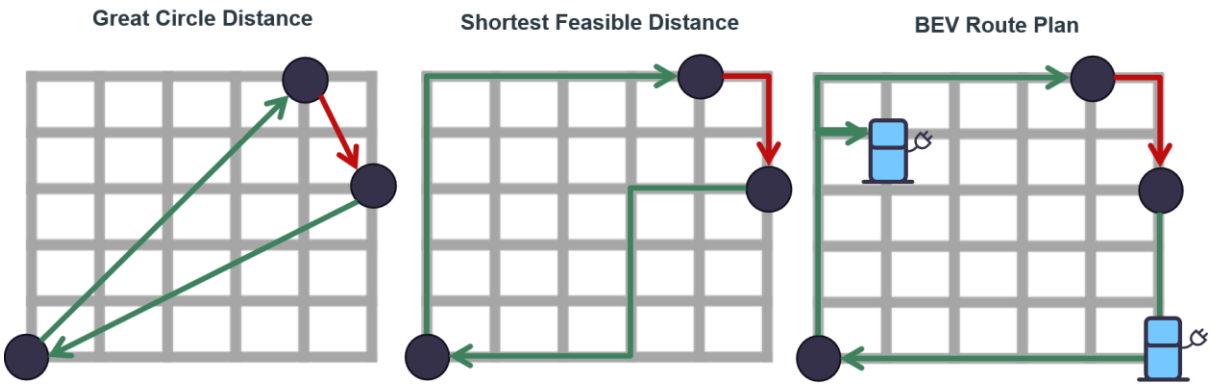

Figure 4 Illustration of transport activity distance types (Green: loaded vehicle, Red: Empty running)

The SFD is measured over the road network and allows for small detours caused by vehicle or road constraints. However, this guidance takes the position that detours made specifically for charging are excluded, even when the route planner includes them. Figure 3 therefore shows the charging detour included in the BEV route plan but not in the SFD.

If transport activity distance is calculated from the actual distance driven obtained, for example, through access to telematics data, a distance adjustment factor (DAF) must be introduced when calculating the emissions of the transport chain element (TCE), so that the approach stays consistent throughout the full calculation. The DAF accounts for deviations between the actual distance and the SFD, including any detours made for charging.

4.2.2 Data sources

ISO 14083 requires the use of primary data, where available. If unavailable, secondary data may be used. Calculations may also combine both primary and secondary data, provided the methodological approach is sound and transparent. For example, if shipment-specific information is unavailable, industry-average assumptions (e.g. average filling rates or empty trip factor) can be used alongside primary data on transport activity distances and vehicle payload capacity to estimate transport activity. The GLEC Framework v3.3 (p. 127) provides further examples and guidance on addressing limited data availability.

The TMS is generally a good source of primary data on transport activity at a consignment level, notably including the transport distance and, potentially, the shipment mass. TMS distances are usually produced by routing software and are not necessarily the SFD (Figure 4). They should therefore be checked against the SFD definition above and adjusted where needed. Alternatively, the SFD can be calculated separately.

Where the TMS is integrated with the fleet management system, telematics or the charging management system, additional information about the vehicle powertrain and energy consumption could be linked to the transport activity. Doing this enables the carrier to further differentiate the TOC definitions used.

The assumptions made, methodology used and shares of primary, modelled and default data should be documented in the report. The GLEC Framework also notes that default values should be regarded as appropriate approximations and replaced with more representative data when these become available.

5. Determine electricity consumption

The objective of this step is to quantify the electricity consumption associated with the TOC over the reporting period and express it on a consistent measurement boundary. The output is a set of electricity quantities, distinguished by supply source and charging location, ready to be combined with the corresponding emission factors in Step 3. Where EACs are used, this step also determines the electricity quantity for which contractual coverage is required.

Electricity may be supplied from the grid or on-site generation, either directly or via a battery energy storage system (BESS). Figure 5 illustrates these supply arrangements. Where sources are combined, electricity flows to vehicle charging, other site uses, storage and grid exports should be distinguished to avoid double counting. Metering and submetering can help quantify these flows and the losses associated with storage, on-site distribution and charging.

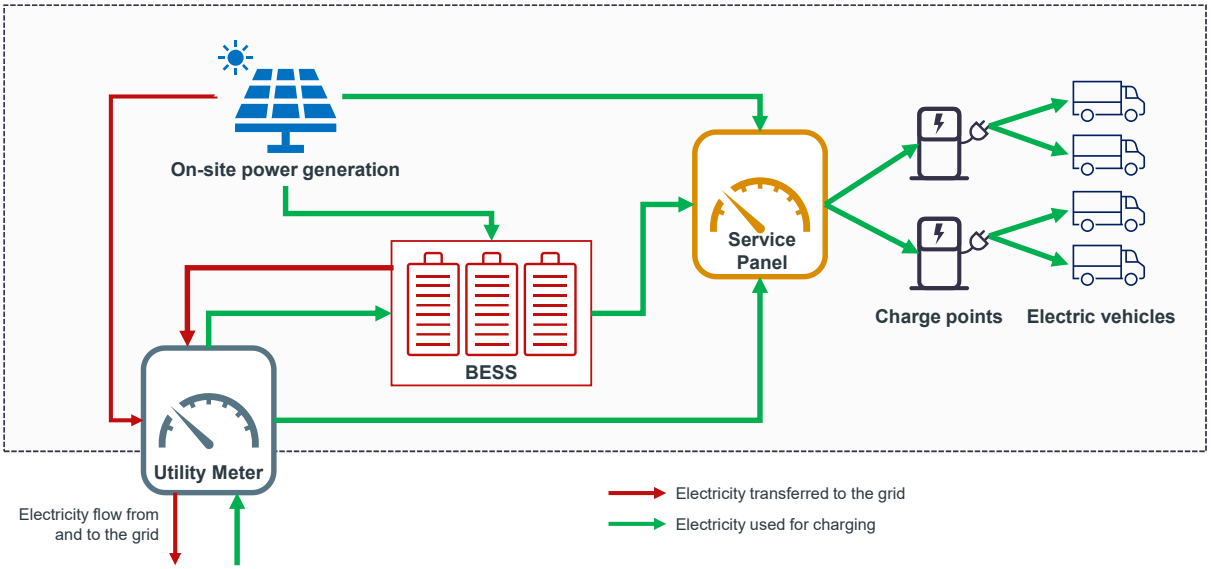

Figure 5 Schematic of energy flow from grid, on-site power generation and BESS to charging equipment and EVs

This section explains how to

- obtain electricity consumption data,
- adjust energy data to a common measurement boundary,
- determine the electricity quantity to be covered contractual instruments where these are used for market-based reporting.

Record contractual coverage separately from physical electricity consumption: contractual instruments affect the attributes assigned to electricity, not the amount consumed. Document the data sources, measurement boundary, assumptions and corrections used. Section 6 explains how to determine the corresponding electricity emission factors.

5.1 Obtaining electricity consumption data

Electricity consumption data may be obtained from several sources across the electricity supply chain, ranging from electricity supply and charging infrastructure records to vehicle telematics and modelled energy consumption estimates. Table 2 summarizes the sources that can be used.

The first four (metered energy consumption, charging activity data, billing information and vehicle telematics) are primary data under ISO 14083. They provide information on electricity use at

different points of the electricity distribution: from the utility meter to the charge point to the vehicle. As a result, they differ in how closely they can be attributed to individual vehicles or TOCs, and in whether charging losses are captured (See Section 5.2 for further information). The last two (modelled energy consumption and default energy intensity factors) are secondary data. They are used where measured data is unavailable. Modelled estimates are built from a documented calculation using activity, vehicle, route and payload data, whereas default factors are generic values that typically reflect energy use at the vehicle and exclude charging losses.

Table 2 Electricity consumption data sources (adapted from SFC 2023)

Type of data	Data type	Description
Metered energy consumption	Primary data	**Metered energy consumption** represents the electricity supplied (from the grid, on-site generation, or battery energy storage systems) to one or more charging facilities and may be measured for example through a dedicated utility meter, charging panel meter, or submetering systems, depending on the site configuration. Where charging infrastructure shares electricity supplies with other building loads, submetering or an energy management system (EMS) may be used to isolate and quantify electricity consumed for charging.
Charging activity data	Primary data	**Charging activity data** is typically obtained from networked charge points and charging management systems. These systems record individual charging sessions and provide information such as the charging location, date and time, electricity delivered and vehicle or user identification. This information can be used to allocated electricity consumption to individual vehicles, even if the same charging infrastructure is used.
Billing information	Primary data	**Billing information** provided by CPOs or electricity suppliers may be available as individual charging session records or periodic invoices. These records typically contain the amount of electricity billed (kWh), allowing electricity consumption to be quantified and allocated to vehicles or TOCs.
Vehicle telematics data	Primary data	**Vehicle telematics data,** often collected by the fleet management system, can provide charge activity data as well as granular information on vehicle energy consumption. Depending on the system, charging records may include charging location, date and time, duration, state of charge, and electricity delivered during each charging session.
Modelled energy consumption	Secondary data: Modelled	**Modelled energy consumption** is an estimate of electricity use based on a documented calculation method, should be based on relevant transport activity, vehicle characteristics, route conditions, payload, and representative BEV energy intensity assumptions, with all methods, assumptions, and data sources disclosed.
Default energy intensity factor	Secondary data: Default	**Default energy intensity factors** are typically based on energy consumption at the vehicle. Behind-the-meter losses are accounted for separately when converting metered electricity into electricity delivered to the vehicle.

Primary data should be used whenever available. The most suitable primary data source depends on three considerations:

- **Accessibility:** how readily the data can be obtained;
- **Emissions linkage:** how accurately the electricity used can be matched to the relevant emission factor;
- **Allocation:** how accurately the energy use can be allocated to the transport activity within the TOC.

Reporting should balance these considerations and transparently disclose any assumptions or limitations. Primary vehicle consumption data can also be supplemented with default assumptions about charging and BESS losses, where relevant.

Different data sources may be combined within a TOC, provided that the electricity quantities represent the same measurement point. For example, vehicle telematics data may be combined with modelled estimates where both represent electricity delivered to the vehicle battery. However, where data sources represent different measurement points, such as depot electricity measured at the utility meter and public charging electricity reported at the point of delivery to the vehicle, the quantities must first be reconciled to a common measurement point.

5.2 Adjustment to a common measurement point

Electricity quantities should be adjusted to a common measurement point, and the corresponding emission factors adjusted as necessary to ensure that electricity consumption and the emissions represented are consistent.

In line with the well-to-tank and tank-to-wheel boundaries of ISO 14083, it is recommended, but not mandatory, that the common measurement point be the electricity delivered to the vehicle battery. This is particularly relevant where electricity consumption is measured or estimated at the vehicle boundary, as is typically the case when calculating transport emission intensity. Alternatively, the grid connection may be used as the common measurement point, which is more consistent with electricity consumption data typically used for Scope 2 reporting.

Where electricity is measured upstream (i.e. towards the energy source) of the chosen measurement point, correction factors should be applied to account for relevant losses between the measurement points. These may include losses in on-site electrical distribution and charging infrastructure, as well as battery energy storage system (BESS) losses, where relevant. Grid transmission and distribution losses should be addressed through the electricity emission factor, where these are not already included in its system boundary.

The types of losses to account for depend on the electricity measurement point and the selected common measurement point, as summarized in Table 3.

Table 3 Losses to account for when adjusting electricity consumption data to the vehicle battery boundary

Data source	Losses to account for
Utility meter	On-site distribution, charging and BESS losses, where relevant
On-site generation meter	On-site distribution, charging and BESS losses, where relevant
BESS output meter	Distribution and charging losses downstream of the BESS
Charging panel meter	Charging losses downstream of the meter
Charge point / billing records	Charging losses downstream of the point of measurement, if not already included
Vehicle telematics (battery energy)	None

The correction factor should be based on measured efficiency values whenever available. Where measured data are unavailable, documented default efficiency assumptions may be used.

For example, if 100 kWh is measured at the charging-panel meter and the previously measured energy efficiency from that point to the vehicle is 97%, the electricity delivered to the vehicle battery is 97 kWh.

For carriers and CPOs, understanding the energy-efficiency value is crucial because it directly affects the effective cost of electricity. However, it is expected that many sites will not have performed this measurement, at least initially. In the absence of a primary measurement of charging efficiency, the GLEC Framework v3.3 default charging efficiency of 90% may be used.

5.3 Determine the quantity of contractual instruments required

Contractual instruments are issued for electricity generated. However, the quantity typically purchased by an end user, such as a carrier or CPO, corresponds to the electricity delivered to their premises, as recorded by the utility meter and reflected in the electricity bill. This quantity excludes electricity lost during transmission and distribution (T&D).

This distinction matters because the GHG Protocol Scope 2 market-based approach and ISO 14083 take different accounting perspectives. Under the GHG Protocol, T&D losses are generally accounted for separately in the grid operator's Scope 2 inventory. Under ISO 14083's well-to-wheel approach, electricity generation, distribution and consumption form part of the same energy lifecycle.

Consequently, to claim full renewable electricity coverage under the ISO 14083 approach, the quantity of contractual instruments must cover not only the electricity delivered and consumed, but also the additional electricity generated to compensate for T&D losses.

For example, a CPO purchases 50 GWh of contractual instruments, corresponding to its metered electricity consumption. Assuming average T&D losses of 5%, approximately 52.6 GWh must be generated to deliver the 50 GWh consumed. The remaining 2.6 GWh represents electricity losses for which no contractual instruments have been purchased. Consequently, this portion of the electricity accounted for in the ISO 14083 lifecycle calculation is not covered by the contractual instruments.

6. Determine electricity emission factors

The objective of this step is to determine the electricity emission factors applicable to the electricity consumption established in Section 5. The emission factors should cover the relevant ISO 14083 emission components and use a measurement boundary consistent with the electricity consumption data. The output is the set of location-based and market-based electricity emission factors needed to calculate the TOC's GHG emissions.

6.1 Emission factor requirements

ISO 14083 requires electricity emission factors to include the relevant lifecycle processes associated with electricity provision. These include primary energy extraction, processing and transport; power generation; power-generation infrastructure; and transmission and distribution losses.

Where the best available emission factors exclude the production and dismantling of energy infrastructure, this should be disclosed in accordance with the cut-off criteria in Section 5.2.3. Annex J.3 provides additional guidance on these components and allows infrastructure emissions to be quantified, documented and reported separately.

The reporting entities are directed to use the most current official GHG emission factors and sources available, provided these follow the applicable ISO 14083 methodology. Where the available sources do not fully meet the requirements, reporting entities should assess the gaps, use supplementary data or approximations where necessary, and document any deviations.

Where parts of an emission factor are unavailable and approximations are necessary, data sources should be selected in the following order of preference (CLEVER, 2026):

1. Verified data from statistically representative organizations in the relevant electricity or fuel value chain.
2. Industry-average life cycle inventory (LCI) data, industry association data, and government statistics.
3. Published literature and scientific studies, including suitable proxies.

6.2 Types of electricity emission factors

Four main types of electricity emission factors are commonly used, expressed in gCO_2e/kWh:

1. Grid emission factor
2. On-site generation emission factor
3. Market-based electricity emission factor (contractual instruments)
4. Residual mix emission factor (unclaimed electricity)

6.2.1 Grid emission factor

The grid-average emission factor should represent the power generation emissions of consumption mix of the relevant geographic grid area, accounting for physical electricity imports and exports where these data are available.

Table 4 provides an illustrative comparison of selected electricity emission factor sources, their geographical coverage and the lifecycle processes they include. The lifecycle categories follow the classification used in the CLEVER project[8]. Of these, four are required by ISO 14083, as indicated

[8] For further explanation of the lifecycle categories and emission factor sources, readers are referred to the CLEVER publication.

in the table. The comparison is not intended to provide an exhaustive list of available sources, but to illustrate differences in lifecycle coverage and geographical scope across commonly used datasets.

Table 4 Lifecycle coverage and geographical scope of selected electricity emission factor sources. (Adapted from CLEVER (2025). "D2.3 Emission Factors Gap Analysis.")

Emission lifecycle categories / Sources	Geographical scope	UPSTREAM	CORE				DOWNSTREAM	
		Fuel preparation & provision	Generation infrastructure	Combustion	Operation and maintenance	End-of-life process	T&D Infrastructure	T&D to customer (losses)
IEA	Global	✓	✗	✓	✗	✗	✗	✓
GREET	North America	✓	✓	✓	✓	✗	✗	✓
EPA eGrid	USA	✗	✗	✓	✓	✗	✗	✓
GLEC Framework	EU, USA, China, India	✓	✓	✓	✓	✓	✗	✓
EcoTransIT World	Global	✓	✓	✓	✗	✓	✗	✓
UK GHG Reporting Conv. Factors	UK	✓	✗	✓	✗	✗	✗	✓
NREL	USA	✓	✓	✓	✓	✓	✗	✗
HBEFA	Europe	✓	✓	✓	✓	✓	✓	✓
Ecoinvent	Global	✓	✓	✓	✓	✓	✓	✓
Sphera	Global	✓	✓	✓	✓	✓	✓	✓

Legend: ISO14083 requirement

The geographical coverage of grid emission factors determines how specifically electricity consumption needs to be allocated. Where charging locations are known, electricity consumption should be assigned to the corresponding grid regions. Where they are unknown and travel crosses multiple grid regions, distance travelled in each region may be used as a proxy to estimate the distribution of electricity consumption.

For example, a BEV travels 1,000 km during a reporting period, covering 600 km in Country A and 400 km in Country B. As charging locations are unknown, electricity consumption is allocated between the two countries in proportion to the distance travelled. Country A's grid emission factor is assigned a weight of 60% and Country B's a weight of 40%, reflecting their respective shares of the total distance travelled.

6.2.2 On-site generation emission factor

The on-site generation emission factor is the GHG emissions associated with electricity generated from a specific power plant or on-site electricity generation source. This factor is used to calculate emissions from electricity generated at a specific installation, particularly for on-site generation such as solar PV, wind or gas-fired power. Data should preferably come from installation-specific or technology-specific lifecycle inventories (LCI), supplier data or verified product-specific lifecycle assessments.

6.2.3 Contractual instrument electricity emission factor:

An electricity emission factor representing the GHG emission attributes of electricity attributed to a reporting entity through contractual instruments. These may include energy attribute certificates (EACs), renewable energy certificates (RECs), guarantees of origin (GO), power purchase agreements (PPAs), green energy certificates and supplier-specific GHG emission rates.

The contractual instruments must meet the following quality criteria specified in ISO 14083, Annex J.3:

- Convey the information associated with the unit of electricity delivered, together with the characteristics of the generator.
- Ensure a unique claim.
- Be tracked and redeemed, retired or cancelled by or on behalf of the reporting entity.

- Correspond as closely as possible to the period of electricity consumption and cover a corresponding timespan.
- Originate within the country of consumption or, where the grid is interconnected, within the relevant interconnected market.

The use of contractual instruments and their associated GHG emission attributes shall be documented and reported separately.

As Section 5.3 discussed, this type of emission factor does not cover the full ISO 14083 energy lifecycle scope and should be supplemented with the relevant lifecycle emission components and adjusted to the applicable electricity measurement point.

Redemption of electricity EACs on behalf of the carrier
ISO 14083, Annex J.3, requires contractual instruments to be tracked and redeemed, retired or cancelled by or on behalf of the reporting entity. This allows for the possibility that another party may manage the redemption of energy attribute certificates (EACs) on behalf of the transport reporting entity.

For example, a CPO operating public, private or shared charging facilities may procure and redeem EACs on behalf of a carrier. This could include a CPO, shipper, logistics service provider (LSP) or another carrier operating charging facilities. In such arrangements, it should be clear that the EACs are redeemed on behalf of the carrier and that the associated electricity attributes are not claimed by another reporting entity.

6.2.4 Residual mix emission factor:

The residual mix emission factor is an electricity emission factor representing the remaining electricity in a grid after renewable electricity attributes claimed through contractual instruments have been removed. Although ISO 14083 does not explicitly prescribe the use of residual mix emission factors, these are relevant when applying the market-based approach to avoid double counting of electricity generation attributes claimed through contractual instruments. Where available, residual mix emission factors should therefore be used for electricity consumption not covered by qualifying contractual instruments.

Residual mix emission factors are typically published at national or regional level. Available sources often report only direct emissions from electricity generation, primarily from fuel combustion, and therefore need to be supplemented with the relevant lifecycle emission components (i.e. upstream emissions and T&D losses) to meet ISO 14083 requirements.

Examples of residual mix emission factors:
- European Residual Mix by the Association of Issuing Bodies (AIB) (https://www.aib-net.org/facts/european-residual-mix)
- US Green-e® residual mix emissions rate (https://resource-solutions.org/2025-residual-mix/)

These sources apply to specific geographical markets and should not be used as proxies for other countries. A comprehensive global list of residual mix emission factors is not currently available.

When no residual mix emission factor is available
Residual mix emission factors are not available in all markets. The current GHG Protocol Scope 2 Guidance allows an unadjusted grid-average emission factor to be used where a residual mix is unavailable, with the absence of a residual mix disclosed. However, because the grid-average factor does not remove electricity attributes already claimed through contractual instruments, double counting of these attributes may remain.

Proposals considered in the ongoing revision of the Scope 2 Guidance include using a fossil-based emission factor where no residual mix is available. This is intended to avoid allocating already-claimed renewable attributes to unclaimed electricity, but the approach remains under discussion and is not an established fallback method.

There is therefore currently no globally available and consistently accepted fallback emission factor for markets without a residual mix.

6.3 Adjusting emission factors

Electricity emission factors may require two types of adjustments:

- **Completing lifecycle coverage:** adding missing lifecycle emission categories to meet the requirements of ISO 14083 (Section 6.1).
- **Aligning measurement points:** adjusting the emission factor to match the measurement point of the electricity consumption data (Section 5.2).

Two common examples are presented below.

6.3.1 Grid emission factor covering only power generation combustion

Where a grid emission factor covers only emissions from fuel combustion during electricity generation, the missing upstream and generation infrastructure emissions should be added. The factor should also account for T&D and behind-the-meter (BTM) efficiency losses to align it with electricity delivered to the vehicle battery.

$$EF_{WtW} = \frac{EF_{grid,combustion} + EF_{grid,upstream} + EF_{grid,infrastructure}}{\eta_{T\&D} * \eta_{BTM}}$$

Where:

- EF_{WtW}= WTW emission factor, in g CO_2e/kWh
- $EF_{grid,combustion}$, $EF_{grid,upstream}$, $EF_{grid,infrastructure}$= combustion, upstream and infrastructure components of the grid emission factor, in g CO_2e/kWh
- $\eta_{T\&D}$= T&D efficiency, between 0 and 1
- η_{BTM} = BTM efficiency, between 0 and 1

6.3.2 Contractual instrument electricity emission factor

A contractual instrument for renewable electricity may report zero combustion and upstream emissions while excluding emissions from generation infrastructure. These emissions should therefore be sourced separately from the supplier or another appropriate source. The factor should also account for T&D and behind-the-meter (BTM) efficiency losses to align it with electricity delivered to the vehicle battery.

$$EF_{WtW} = \frac{EF_{EAC,infrastructure}}{\eta_{T\&D} * \eta_{BTM}}$$

Where:

- EF_{WtW}= WTW emission factor, in g CO_2e/kWh

- $EF_{grid,infrastructure}$ = infrastructure component of contractual instrument electricity emission factor, in g CO_2e/kWh
- $\eta_{T\&D}$ = T&D efficiency, between 0 and 1
- η_{BTM} = BTM efficiency, between 0 and 1

6.4 Location-based WTW emission factor

A location-based WTW emission factor is derived by combining the electricity consumed from the grid with the corresponding lifecycle (WTW) grid emission factor and, where applicable, electricity generated on-site with the corresponding WTW emission factor of the generation source. The example below (Figure 6) shows how these may be combined to derive the WTW emission factor for a TOC.

The TOC covers cross-border BEV transport. Annual electricity charged is distributed across three charging locations: 40% at Depot A, 30% at Public Charging B, and 30% at Public Charging C. Depot A and Public Charging B are located in the same Country X with an ISO 14083-compliant grid emission factor, $EF_{grid,X}$, of 100 g CO_2e/kWh, whereas Public Charging C is located in Country Y with a grid emission factor, $EF_{grid,Y}$, of 1,000 g CO_2e/kWh.

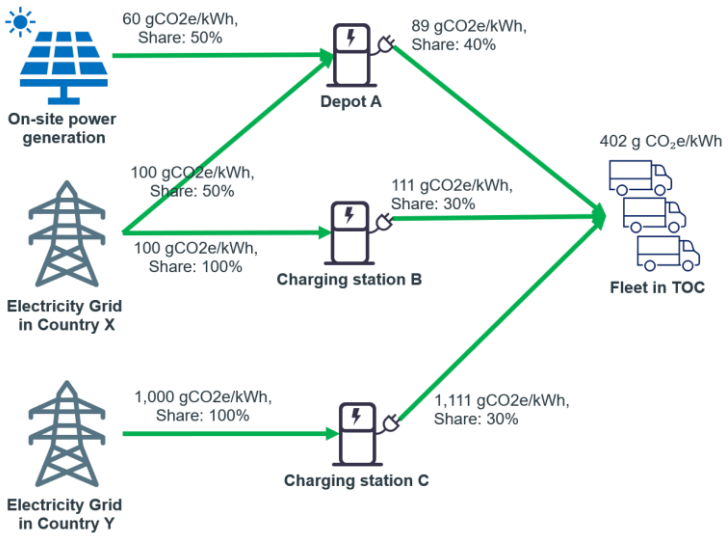

Figure 6 Example of location-based emission factor derivation

At Depot A, on-site electricity generation, with an emission factor, EF_{solar}, of 60 g CO_2e/kWh, directly supplies 50% of the electricity required for charging, reducing the amount of electricity drawn from the grid by 50%.

$$EF_{depot\ A} = 50\% * EF_{grid,X} + 50\% * EF_{solar} = 50\% * 100 + 50\% * 60 = 80\ gCO_2e/kWh$$

Assuming 90% BTM energy efficiency at all charging locations, the resulting WTW emission factors are 89 g CO_2e/kWh for Depot A, 111 g CO_2e/kWh for Public Charging B, and 1,111 g CO_2e/kWh for Public Charging C.

$$EF_{WtW} = \sum Charging\ activity\ share \times EF_{WtW,Location} = 40\% * 89 + 30\% * 111 + 30\% * 1{,}111 = 402\ gCO_2e/kWh$$

The resulting WTW emission factor is 402 g CO_2e/kWh.

6.5 Market-based WTW emission factor

In the market-based approach, the electricity supplied for the TOC is classified into three categories, based on its source and the contractual instruments used:

- Grid electricity with eligible contractual instruments: use the contractual instrument WTW emission factor.
- Grid electricity without eligible contractual instruments: use the residual mix WTW emission factor.
- Direct-line electricity from on-site generation: Use the WTW emission factor of the generation source.

The example below (Figure 7) shows how these may be combined to derive the WTW emission factor for a TOC.

The TOC covers BEV transport, with annual electricity delivered at the depot is 100 MWh, of which 20 MWh is supplied directly from on-site solar generation, with a WTW emission factor of 60 g CO_2e/kWh. The remaining 80 MWh is supplied from the grid. Its emission factor is derived from the electricity sources and their associated emission profiles.

The carrier has purchased GOs covering 70 MWh of grid electricity. The GOs have an associated generation emission factor, EF_{CI}, of 50 g CO_2e/kWh. The remaining 10 MWh of grid electricity is not covered by eligible contractual instruments and is therefore assigned the residual mix emission factor, EF_{RES}, of 1,000 g CO_2e/kWh.

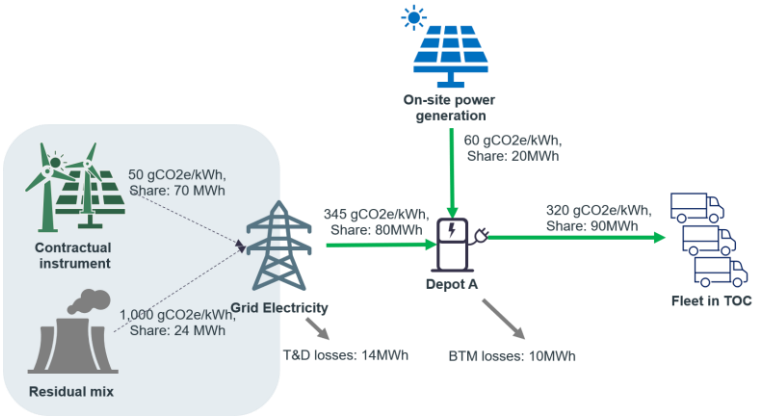

Figure 7 Example of market-based emission factor derivation

Assuming a T&D efficiency of 15 %, the 80-MWh grid electricity delivered to the depot required a total of 94 MWh of electricity generation. The additional 14 MWh lost through the T&D activity is also assigned the residual mix emission factor.

The resulting market-based emission factor of the delivered grid electricity aggregates the emission factor of the contractual instrument and the residual mix proportionally to the electricity amount.

$$EF_{grid,market} = \frac{E_{CI} * EF_{CI} + E_{RES} * EF_{RES}}{E_{grid,generated} * \eta_{T\&D}} = \frac{70 * 50 + 24 * 1{,}000}{94 * 0.85} = 345\ gCO_2e/kWh$$

Assuming 90% BTM energy efficiency, the WTW emission factor is calculated.

$$EF_{WTW,market} = \frac{E_{Solar} * EF_{Solar} + E_{grid} * EF_{grid,market}}{E_{Depot} * \eta_{BTM}} = \frac{20 * 60 + 80 * 345}{(20 + 80) * 90\%} = 320\ \ gCO_2e/kWh$$

The resulting WTW market-based emission factor is 320 g CO_2e/kWh.

7. Calculate GHG emissions and emission intensity

This section explains how to calculate the total GHG emissions and GHG emission intensity of a Transport Operation Category (TOC). The calculation is performed separately for the location-based and market-based approaches.

Calculate total GHG emissions

First, calculate the total GHG emissions associated with the electricity used for the TOC. Multiply the electricity supplied at the vehicle-battery boundary by the applicable energy provision emission factor derived in Section 6.4 for the location-based approach and Section 6.5 for the market-based approach.

$$GHG_{WtW,location} = E_{TOC} * EF_{WTW,location}$$

$$GHG_{WtW,market} = E_{TOC} * EF_{WTW,market}$$

Calculate GHG emission intensity

Calculate the GHG emission intensity by dividing the total GHG emissions of the TOC by its corresponding transport activity. Express transport activity using the applicable unit for the type of transport operation, such as tonne-kilometres or tonne-miles. For some transport services, such as post and parcel transport, other units of transport activity may be more appropriate, in line with ISO 14083.

$$EI_{location} = \frac{GHG_{WtW,location}}{T_{TOC}}$$

$$EI_{market} = \frac{GHG_{WtW,market}}{T_{TOC}}$$

8. Supporting information and disclosures

This section specifies the information to support transparent, comparable and traceable reporting of GHG emissions from electric freight vehicle operations. It supplements the general reporting requirements of ISO 14083 and the GLEC Framework by focusing on the features that differentiate BEVs from conventionally fueled vehicles.

The BEV-specific disclosures are structured around the two electricity accounting approaches: location-based approach and the market-based approach. Location-based and market-based results should be reported separately. Both results shall cover the same transport activity, electricity consumption and reporting period. The only difference between them from the electricity emission factors used.

8.1 Supporting information

For each BEV transport WTW emission factor applied to a TCE, the following supporting information should be provided to substantiate the calculation and associated emissions claim. It is the responsibility of the reporter to collect the information from carrier, the CPO or any other party. Different use cases of who holds the energy and emissions information are discussed in Section 8.

Information	**Description**	
Applicable organizational and geographic scope	▪ Organization, fleet ▪ Transport Operating Category ▪ Specific charging sites/network (e.g. own or 3rd party)	
Source of electricity emission factor	**Location-based approach** ▪ Grid emission factor ▪ On-site power generation (e.g. solar, hydropower) ▪ 3rd party CPO-supplied emission factor location-based	**Market-based approach** ▪ On-site power generation (e.g. solar, hydropower) ▪ 3rd party CPO-supplied emission factor market-based ▪ Contractual instrument electricity emission factor used for market-based approach (e.g. EACs, REGOs) ▪ Residual mix emission factor
Electricity source composition (if applicable)	Share of each electricity source where the emission factor represents a blend of multiple electricity sources.	
Electricity activity data source	Classification of the electricity activity data used to quantify electricity consumption: primary data, modelled data, or default data. Provide overview share of each.	
Electricity activity data description	Description of the underlying electricity activity data used, such as utility meter data, on-site energy meter data, charging-session data, charging invoices, vehicle telematics, modelled energy consumption, or default energy intensity factors.	
Electricity loss treatment	Whether transmission and distribution or behind-the-meter losses are included in the emission factor. If applicable, disclose the loss factor type and amount applied or state that losses are already incorporated in the supplied emission factor.	
Reporting period	Year or reporting period represented by the emission factor.	
Emission factor value	WTW emission factor value and unit.	

8.2 Quality criteria for market-based reporting

For the market-based approach, the following quality criteria are specified in ISO14083 Annex J.3 Electricity:

- convey the information associated with the unit of electricity delivered together with the characteristics of the generator;
- are ensured with a unique claim;
- are tracked and redeemed, retired or cancelled by or on behalf of the reporting entity;
- are as close as possible to the period to which the contractual instrument is applied and comprises a corresponding timespan; and
- are produced within the country, or within the market boundaries where consumption occurs if the grid is interconnected.

Evidence of retirement or cancellation should be retained and made available to support the reported claim.

8.3 Additional requirements for attribution within physically linked electricity systems

In some physically connected electricity systems, electricity from multiple sources is blended before being supplied to charging infrastructure. For example, a carrier may use both grid electricity and on-site solar generation through a shared behind-the-meter electrical system.

For the location-based approach, electricity attributes are allocated in proportion to the electricity supplied by each source. For the market-based approach, however, electricity attributes may be attributed non-proportionally to specific charging activities through a reconciled inventory. This allows renewable electricity attributes to be assigned to specific charging activities without requiring the physical electricity flows during each charging session to reflect the attributed shares. Non-proportional attribution is permitted only for the market-based approach.

Regardless of the allocation approach, the total quantity of electricity attributes allocated across the system shall not exceed the quantity generated, and all electricity volumes and associated attributes shall remain quantitatively reconciled.

To support such non-proportional allocation of electricity attributes within a physically connected system, reporters may apply a mass-balance credit method consistent with ISO 22095:2020 and ISO 22095-2:2026. Under this approach, electricity attributes are recorded and allocated through a reconciled ledger. The ledger should ensure that attributes are not allocated more than once and that the total quantity allocated does not exceed the quantity available within the system.

9. Market-based electricity accounting use cases

This section illustrates how the calculation and disclosure methodology applies in common reporting situations for BEV operations. The use cases do not introduce a separate methodology. Instead, they demonstrate how the principles described in Section 5 to 7 are applied when different actors hold the energy data, procure contractual instruments, provide WTW emission factors, or receive the resulting emission intensity report for the ISO 14083 market-based approach.

The use cases are organized according to the entity procuring the electricity and/or contractual instruments.

- In use cases 1–3 (Section 9.1), the carrier is responsible for procurement and for incorporating any resulting market-based electricity claim into its TOC-level calculation.
- In use cases 4–6 (Section 9.2), an LSP or shipper procures on the carrier's behalf and transfers the resulting claim to the carrier for incorporation into its TOC-level calculation and emission inventory.

In each case, ISO 14083 requirement applies, which is that the contractual instruments, if used in the market-based approach, "are tracked and redeemed, retired or cancelled by or on behalf of the reporting entity". For BEV transport the carrier is normally the reporting entity.

The following roles are assumed throughout all use cases:

- **Carrier:** carries out the transport operations and normally calculates and reports the emissions and emission intensity of the TOC.
- **LSP and Shipper:** arranges, purchases or uses transport services carried out by carriers. They normally receive emissions reports from carriers but may also calculate transport emissions, often without adequate information from carriers.
- **CPO:** any actor involved in operating charging infrastructure or providing charging services that supplies data on electricity consumption, billing, associated emission factors and supporting information. This may include carriers, LSPs, shippers, electric mobility service providers (eMSPs) and fuel card service providers. The CPO provides electricity-related data but does not normally report transport emissions.
- **Contractual instrument purchaser:** acquires contractual instruments to support market-based electricity claims by the carrier. While this could typically be the carrier or the CPO, other LSPs and Shippers could also play this role.

9.1 Carrier-led electricity procurement and market-based claims

Carriers normally calculate and report the emissions and emission intensity of their transport operations under ISO 14083. For the market-based approach, this requires them to gather information on electricity consumption, the underlying electricity supply and associated emission factors.
In practice, carriers often have access to detailed electricity consumption data, either from charging infrastructure they own or operate or from charging records provided by CPOs. However, they may not have full visibility of the underlying electricity supply, including the relative shares of grid electricity, on-site generation and energy storage. They generally have better access to emission factor information for charging facilities under their own control, but may need to obtain market-based emission factor information from third-party CPOs.

The three use cases (numbered 1 to 3 in Figure 8) below illustrate distinct reporting scenarios.

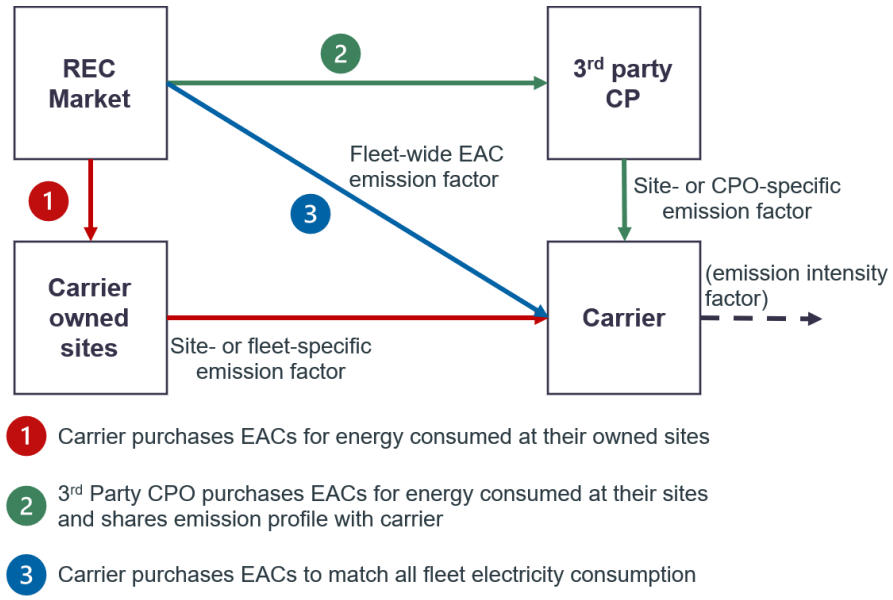

Figure 8 Carrier-led electricity procurement and market-based claims

9.1.1 Use Case 1 – Carrier-owned charging infrastructure

The carrier owns and operates both the BEVs and the charging infrastructure. Consequently, the carrier has access to information regarding the vehicle activity, charging activity, primary data on electricity consumption, electricity procurement, and any contractual instruments associated with the electricity available at the charging location. This represents the strongest primary-data scenario, as metered electricity consumption, charging-session records, vehicle telematics, electricity bills, and contractual instrument documentation can generally be reconciled internally.

Example: A regional logistics company operating in India runs a fleet of 50 BEVs that return to its depot every evening. All vehicles are charged overnight using company-owned charging stations. At the end of the calendar year, the carrier downloads the annual charging data from its energy management system, which shows that the depot purchased 4.5 GWh of electricity. The carrier enters into a virtual power purchase agreement (VPPA) with an Indian renewable energy generator for 4.5 GWh of renewable electricity. The generator sells the electricity into the Indian electricity market, while the associated RECs are transferred to the carrier. The carrier obtains from the generator an ISO 14083-compliant WTW emission factor for the contracted generation technology, as well as a residual mix emission factor to account for T&D losses not covered by the RECs. The carrier uses the transferred RECs and the corresponding emission factors to calculate its market-based emissions and shares the results with its customers.

9.1.2 Use Case 2 – Third-party CPO provides charging information

The carrier operates the vehicles but relies on a third-party CPO for charging. The CPO must provide, at a minimum, the billed electricity consumption (kWh) and the market-based emission factor corresponding to the measurement point of the billed electricity. An efficiency value should be applied in case the measurement points are not aligned. The carrier links the CPO-provided energy volumes to the relevant transport activity and multiplies it with the respective emission factor to receive the GHG emissions for the TOC.

Example: A long-haul carrier operates BEVs across Germany, France, and the Netherlands. Instead of owning charging infrastructure, the drivers use a public charging network under a fleet charging contract. At the end of each month, the CPO provides a consolidated invoice listing every charging session, the electricity delivered, and an ISO 14083-compliant market-based WTW emission factor for the charging service. The CPO cancels GOs monthly through a bulk

cancellation process to support the renewable electricity supplied to its customers. The GOs purchased cover the consumption at the sites but not the T&D losses. The CPO provides the carrier with the corresponding market-based emission factor and supporting evidence of the GO cancellations. The carrier combines the monthly charging data and emission factors with its transport activity records to calculate its WTW emissions.

9.1.3 Use Case 3 – Carrier purchases contractual instruments

The carrier relies on third-party charging services, but the CPO does not use an eligible contractual instrument. The carrier therefore purchases and retires EACs directly for the electricity charged. In this case, the carrier uses CPO billing information or charging-session records to establish electricity consumption or estimates it using secondary data. The carrier develops its own market-based emission factor using EACs and the adjustment methods outlined in the guidance.

Example: A carrier operates BEVs using several public charging networks for drayage operations in mainland China. Each CPO reports the electricity consumed during the year. They do not procure renewable electricity contractual instruments. To prepare its annual sustainability report, the carrier aggregates the charging invoices totaling 850 MWh and estimates an additional 120 MWh to account for T&D and BTM losses. The carrier purchases and retires 970 Chinese Green Electricity Certificates (GECs) matching the total WTW electricity consumption. It also obtains an ISO 14083-compliant emission factor from the energy trader for the generation installations specified in the GECs. The carrier uses this emission factor to calculate and report its market-based emissions.

9.2 LSP/shipper-led electricity procurement and market-based claims

Unlike the scenarios described in Section 9.1, the procurement and retirement of contractual instruments in these use cases is undertaken by the shipper or LSP to support the carrier's market-based electricity claim. If the carrier report their emissions, they use the electricity emission attributes and supporting evidence provided by the shipper or LSP. The same arrangements also apply where the carrier does not report its emissions and the shipper or LSP calculates transport emissions independently, including where it relies entirely on modelled data for the transport services it procures.

In practice, the shipper or LSP frequently has limited visibility of the carrier's charging activities. They may receive only aggregated electricity consumption information, or in some cases no primary data at all. As a result, they may need to estimate electricity consumption using transport activity shares or modelled energy intensity factors. Additional documentation and evidence transfer are required to ensure that any market-based electricity claim can be incorporated into the carrier's TOC-level calculation.

The three use cases below illustrate common arrangements, ranging from granular primary charging data to calculations based predominantly on modelled energy consumption.

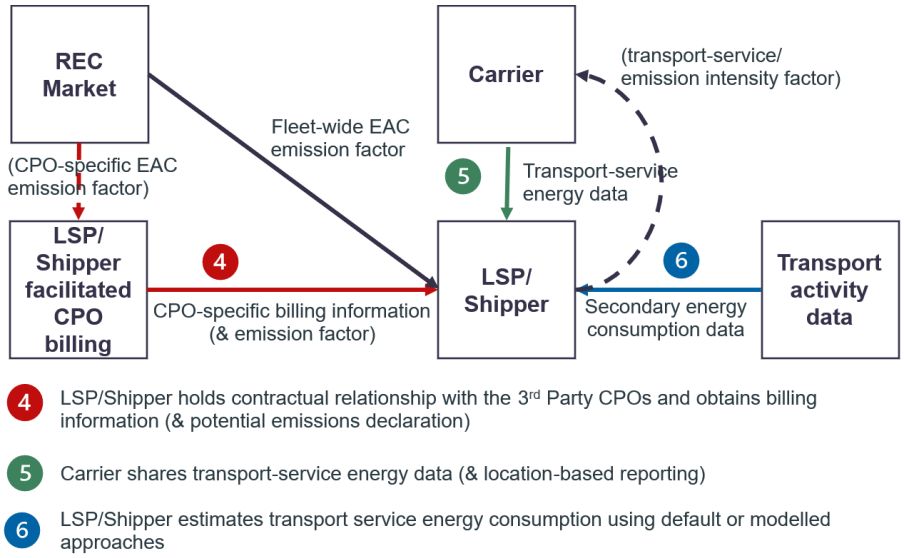

Figure 9 LSP/shipper-led electricity procurement and market-based claims

9.2.1 Use Case 4 – CPOs share detailed energy data

The LSP or shipper purchases the charging service and may also procure contractual instruments to support a market-based electricity claim. The CPO provides electricity consumption, charging-session records, billing information, and if purchased by the CPO, information about the emissions attributes of contractual instruments. The LSP or shipper uses this information to determine the electricity consumed by the carrier's vehicles and, where necessary, procure additional contractual instruments to support the market-based calculation. It then calculates the market-based emissions of the transport service. Where the LSP or shipper cancels contractual instruments on behalf of the carrier, it shares the cancellation information and supporting evidence with the carrier.

Example: A retailer contracts an LSP to organize a dedicated fleet of BEV trucks for its distribution network in the USA. While the carrier manages the day-to-day fleet operations the LSP facilitates payment to the public CPO for all charging sessions. Throughout the year, the LSP receives detailed charging-session records from the CPO, including the electricity consumed, charging locations, and billing information. Based on this data, the LSP purchases and retires US-market RECs corresponding to the electricity consumed and the associated energy from losses, on behalf of the carrier. The retirement evidence and supporting documentation is shared with the carrier. However, the LSP calculates and reports the resulting market-based transport emissions and emission intensity to the retailer.

9.2.2 Use Case 5 – Carriers share aggregated energy data

The carrier provides aggregated electricity consumption data rather than charging-session or site-specific information data to the LSP or shipper. The LSP or shipper uses this information to estimate the total amount of contractual instruments to be purchased, based off assumptions about T&D and BTM losses.

The geographical distribution of electricity consumption may be approximated using the share of transport activity performed in each country (see Section 6.2.1), if relevant. This allocation provides a basis for estimating the quantity of contractual instruments to be procured for each market boundary. The assumptions made for this approximation should be disclosed.

Example: An FMCG company works with several dedicated medium-sized carriers operating BEVs across five European countries. The carriers explain that, for various reasons, they are unable to

procure or manage contractual instruments themselves, but can share their aggregated electricity consumption data for the contracted transport services. They provide no further information on charging locations or electricity emission factors. The FMCG company estimates the total quantity of electricity to be covered by contractual instruments, including the electricity associated with applicable T&D and BTM losses. It also estimates the geographical distribution of electricity consumption based on the share of tonne-kilometres performed in each country. Based on these estimates, the company procures and cancels GOs within the relevant geographical markets and calculates the associated market-based electricity emissions.

9.2.3 Use Case 6 – LSP/Shipper models energy data

Primary energy data is unavailable. The LSP or shipper therefore estimates electricity consumption using secondary data, such as modelled energy intensity factors linked to transport activity. The modelling approach should document all assumptions, input parameters, emission factor sources, correction factors, and data limitations in accordance with ISO 14083 reporting requirements for modelled data. Where transport activity spans multiple countries, country-level charging demand may be approximated using transport activity shares.

Example: A manufacturer purchases BEV transport services from several carriers. The manufacturer typically uses a modelling approach to calculate the transport emissions for all its transport services. The manufacturer has access to detailed information on each shipment, including origin and destination, distance, payload, vehicle type, and transport activity (e.g. tonne-km), from its transport management system (TMS). Using this operational data together with industry default energy intensity factors (kWh per tonne-km) for BEVs, the manufacturer estimates the annual electricity consumption associated with the transport services. Based on the estimated electricity demand, the manufacturer calculates the corresponding market-based transport emissions using documented assumptions and emission factors. Because the electricity consumption is derived entirely from modelled secondary data rather than measured charging data, the resulting calculation should be clearly identified as an estimate. Any procurement of contractual instruments based on the estimated electricity consumption represents a methodological interpretation rather than an established market-based accounting approach and should therefore be disclosed transparently.

10. Case studies

The authors of the guidance worked with P&G to develop the following two case studies that show how use cases may appear in real-world, and how data is used.

The first case study explores how primary data from both the carrier and the CPO could be used by a shipper to derive emission factors and emissions from charging data. In this case, both the carrier and the CPO have purchased GOs for the electricity consumed at their sites but not for T&D losses.

The second case study explores how emissions factors can be modelled using a calculation tool. It introduces a BEV transport operation serving freight from four hubs.

Disclaimer: *The P&G case studies in this paper illustrate a potential methodology being explored by P&G to integrate renewable energy in EV operation – via market-based and location-based interventions. It should not be interpreted as P&G's current corporate GHG reporting methodology.*

10.1 Case study 1: Reporting based on carrier and CPO data

The e-truck pilot forms part of the EU-funded ZEFES project, which explores heavy-duty cross-border EV operations along the TEN-T corridor. Beyond demonstrating operational feasibility, the project was used to pilot renewable electricity reporting and accounting for e-truck operations. From March to November 2026, the e-truck dedicated to P&G transports operated between the carrier site in Zeebrugge and P&G's distribution center in Amiens. The carrier site was equipped with a project-owned megawatt charger, and the initial charging strategy was to start with 100% battery coverage in Zeebrugge and on the way back from Amiens top-up at a 3rd party charging stop in Lille, operated by Milence. With increasing operational confidence, this additional stop was later no longer needed as the truck could fulfill the roundtrip without extra charging.

As a first step, the location-based and market-based WTW emission factors must be determined for each charging site. The 2024 national grid mix factors were provided by ifeu. The 2024 market-based emission factors were calculated based on the market instruments – outlined below.

1. **Electricity source and country of origin of the market instrument:**
    a. **Carrier:** Green Electricity contract with 100% renewable supply, verified by the Flemish Regulatory Framework. The exact energy split cannot be determined, but based on the data available an 80/20 split between hydro and wind is assumed:

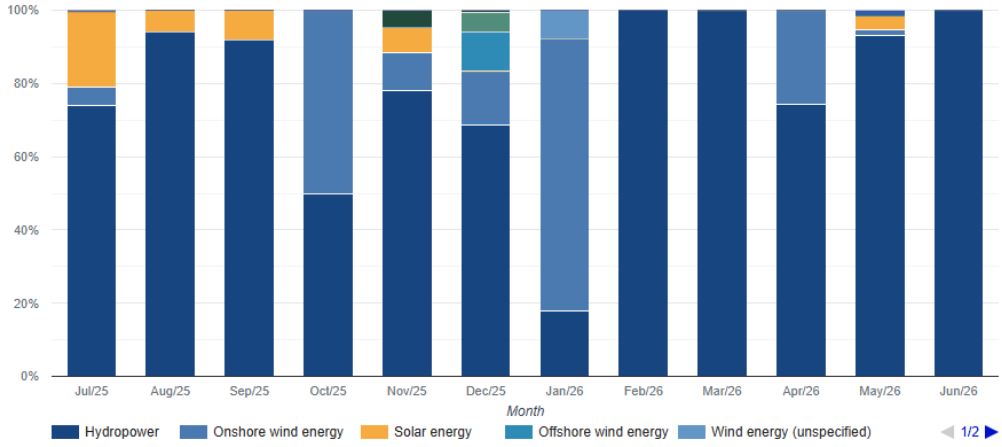

Figure 10 Carrier's electricity mix by month (Source: Reproduced with permission from Vlaamse Nutsregulator, https://www.vlaamsenutsregulator.be/groencheck)

b. **Milence:** Guarantees of Origin from 46% wind and 54% solar from France

2. **Calculation of site-specific emission factors based on respective electricity sources:**
   a. **Carrier:** 2024 European averages for hydro and wind incl. T&D losses for medium voltage electricity provided by ifeu
      i. Hydro: 8gCO2e/kWh
      ii. Wind: 19gCO2e/kWh
      iii. Site: 80% x 8gCO2e/kWh + 20% x 19gCO2e/kWh = **10gCO2e/kWh**

   b. **Milence:** 2024 French factors for wind and solar incl. T&D losses for medium voltage electricity provided by ifeu
      i. Wind: 20gCO2e/kWh
      ii. Solar: 35gCO2e/kWh
      iii. Site: 46% x 20gCO2e/kWh + 54% x 35gCO2e/kWh = **28gCO2e/kWh**

Table 5 Location- and market-based emission factors for the carrier's and Milence's sites

Emission factors expressed in gCO2e/kWh incl. T&D losses	**Location-based**	**Market-based**
Zeebrugge, Belgium national grid mix	156	
Zeebrugge, Carrier Green Electricity Contract		10
Lille, France national grid mix	52	
Lille, Milence Guarantees of Origins		28

Once several charging points are involved, a weighted average lane emission factor needs to be calculated based on the charging strategy. The primary charging data was obtained from Milence billing information and metered charging data on carrier side, so behind-the-meter losses still have to be considered. The consumption data was additionally obtained from the truck OEM's telematics, however, given that it is a dedicated truck, the charged electricity can be used for the emission calculation, which is why the table only includes the charging information.

$$Lane\ EF\ Location-based\ = \frac{(kWh_{Carrier} x\ EF_{\boldsymbol{Belgium}}) + (kWh_{Milence} x\ EF_{\boldsymbol{France}})}{kWh_{Carrier} +\ kWh_{Milence}}$$

$$Lane\ EF\ Market-based\ = \frac{(kWh_{Carrier} x\ EF_{\boldsymbol{Carrier}}) + (kWh_{Milence} x\ EF_{\boldsymbol{Milence}})}{kWh_{Carrier} +\ kWh_{Milence}}$$

Table 6 Electricity, emissions and emission factors breakdown by month

Month	Electricity charged			Electricity consumption incl. BTM losses*	Share of charging		Location-based		Market-based	
	Carrier	Milence	Total		Carrier	Milence	WTW EF (g CO2e/kWh)	WTW Emissions (tonnes CO2e)	WTW EF (g CO2e/kWh)	WTW Emissions (tonnes CO2e)
Apr-26	7,487	2,303	9,790	10,878	76%	24%	132	1.44	14	0.15
May-26	8,570	216	8,786	9,762	98%	2%	153	1.50	10	0.10
Jun-26	7,361	-	7,361	8,178	100%	0%	156	1.28	10	0.08
Jul-26	9,213	-	9,213	10,237	100%	0%	156	1.60	10	0.10
Aug-26	10,238	-	10,238	11,376	100%	0%	156	1.77	10	0.11
Sep-26	9,104	-	9,104	10,115	100%	0%	156	1.58	10	0.10
Total								9.16		0.66

** BTM losses are assumed to be 10%*

Result: market-based emissions are 93% lower than the location-based emissions as the Belgian national grid mix still contains approx. 24% of fossil energy sources according to ifeu

10.2 Case study 2: Reporting using modelled data

P&G operates four distribution centers in China equipped with on-site photovoltaic (PV) installations and EV charging infrastructure, enabling carriers to charge e-trucks at P&G sites. The objective is to include the on-site generated solar electricity in P&G's location-based emission calculation for EV operation and thus lowering the respective emission intensity. Consistent with ISO 14067, on-site solar electricity can be attributed to EV charging if its renewable attributes have not been sold, transferred, or claimed elsewhere. This solar electricity considered for the hub-specific Emission Factors fulfills the requirement.

The share of on-site solar electricity can be reflected through a weighted-average hub-specific emission factor, calculated based on the annual electricity supply of the hub coming from the grid and solar generation respectively. The calculation uses metered data from the preceding calendar year. Prerequisite for calculating the hub emission factor for the first time is a 12-months data history to account for seasonal fluctuations.

The following emission factors are applied in the hub emission factor calculation. They describe the full carbon footprint factor with the boundary up to the charging equipment:

- **On-site PV electricity:** 66 gCO_2e/kWh (2023 China PV emission factor provided by ifeu)
- **Grid electricity:** 622 gCO_2e/kWh (2023 China grid emission factor reported by the Chinese Ministry of Ecology and Environment (MEE) and referenced in GLEC 2025)

$$Emissionfactor\ Hub = \frac{(kWh_{solar} x\ EF_{solar}) + (kWh_{grid} x\ EF_{grid})}{kWh_{solar} + kWh_{grid}}$$

Where:

- *EF stands for emission factor for solar and national grid and*
- *kWh stands for the energy supplied to the hub*

Table 7 Electricity sources and the resulting emission factors of the hubs

Hub	Hub Consumption	PV Power Generation	Imported from grid	Grid	Solar	Hub Emission Factor	Reduction vs Grid
A	4,000,000	2,500,000	1,500,000	38%	63%	274	-56%
B	3,000,000	2,000,000	1,000,000	33%	67%	251	-60%
C	2,000,000	800,000	1,200,000	60%	40%	398	-36%
D	1,000,000	400,000	600,000	60%	40%	398	-36%

The values shown are for illustration only and do not represent actual data.

Upon determination of the hub-specific emission factor, it must be accurately linked to the corresponding transport activity. P&G considers utilizing EcoTransIT, a GLEC-accredited tool that can provide a lane-based emissions calculation, for this mapping and calculation process. It is already used by P&G to compute its overall location-based emissions. On top of that, the tool enables the upload of customer-specific emission factors, allowing shippers to enhance emission calculations by incorporating primary data. The modelled consumption already includes charging losses.

The charging strategy assumes that all short-haul transports are charged on P&G side and for longer haul transport, a mix between depot charging and public charging is assumed. To bring it closer to operational reality, the methodology assumes an average battery capacity and thus e-truck driving range of 400 km. Charging will take place during operational activities such as loading/unloading of the truck or during waiting periods. Trucks are assumed to arrive at P&G site with a 20% battery level and charge up to 80%. This assumption reflects current operational observations given the limited time available and generally slower charging rates associated with higher battery levels (i.e. charging from 80% to 100%). However, it will be validated monthly against actual charging and operational data. Where material deviations are identified, the assumption will be reviewed and adjusted to ensure that it remains representative of actual operations.

The resulting 60% charge-up corresponds to a 240 km driving range attributable to charging at the hub. For shipments exceeding 240 km, the methodology assumes that the additional distance is covered through public charging. Consequently, the national grid emission factor is applied to the portion of the shipment distance exceeding 240 km.

The calculation within EcoTransIT considers the ship-from location and shipment distance to determine the applicable lane emission factor for the individual transport:

$$Lane\ Emissiofactor = \left(EF_{site}\ x\ \left(\frac{\min(240km, total\ distance)}{total\ distance}\right)\right) + \left(EF_{grid}\ x\ \left(\frac{\max(total\ distance - 240km, 0)}{total\ distance}\right)\right)$$

Lastly, monthly validation is required to confirm that the modelled energy consumption attributed to the site emission factor, does not exceed the energy actually charged at each site, which is measured by the charging equipment.

$$Charged\ Electricty > \left(\sum kWh_{<240km}\right)$$

10.2.1 Hypothetical extension to a Market-Based Approach

To maximize the emissions reduction potential of EV operations, electricity used for public charging may be matched with Energy Attribute Certificates (EACs), such as Green Energy Certificates (GECs) in China. This would convert the location-based approach into a market-based approach. Where renewable electricity is not procured directly by the CPO, the carrier may purchase and retire EACs for the charged electricity. The applicable emission factor is determined by the technology and country of origin specified in the EACs. Certificates must be matched with the electricity consumed for EV charging, including T&D losses. Using the China example, three electricity sources are considered: (1) on-site generation, (2) grid electricity supplying the remaining hub demand, and (3) grid electricity used for public charging. Under the location-based approach, only the on-site solar generation is counted as renewable electricity consumption. Under the market-based approach, grid electricity may also be counted as renewable where the corresponding GECs are acquired and claimed.

Remaining Hub Demand

Assuming the shipper already procures GECs for its Scope 2 electricity consumption, the remaining hub electricity demand may be treated as renewable electricity under a market-based approach. The assumed GEC portfolio procured for China consists primarily of wind and solar certificates; however, the exact technology mix cannot be determined. As a conservative assumption, all GECs may be attributed to solar generation, reflecting the higher, more conservative emission factor.

Public Charging:

The carrier may further extend the market-based approach by procuring and retiring GECs for electricity consumed through public charging. Certificates must cover the charged electricity, including T&D losses, whereas emissions are calculated using the vehicle consumption. Within the reporting year, out of the 1,500MWH consumed in total for the transport, 645 MWH were charged publicly. Calculating with 10% T&D losses, the number of GECs to be bought by the carrier is 717.

Table 8 Comparison of the location-based and market-based reported emissions

	Total kWh consumed	**EF in gCO2e/kWh**	**Emissions in tCo2e**	**Reduction vs location-based**
Location-based standard	1,500,000	622	933	
Location-based incl. on-site generation	1,500,000	330	495	-47%
Market-based	1,500,000	66	99	-89%

All values shown are for illustration only and do not represent actual data.

This demonstrates that realizing the full decarbonization potential of EVs requires renewable electricity to be procured for the full electricity consumption.

11. Conclusion

The transition to battery-electric road freight changes where transport emissions occur and how they need to be calculated. For internal combustion engine vehicles, most operational energy and emissions can be associated directly with fuel consumption. For BEVs, there are no direct tank-to-wheel GHG emissions, while the well-to-wheel emissions depend on the electricity consumed and its associated emission factor. This makes the treatment of electricity central to credible BEV transport emissions accounting.

This guidance provides a consistent approach for applying ISO 14083:2023 and the GLEC Framework to these calculations. In practice, organizations calculating BEV transport emissions should:

- **Use primary electricity consumption data where available**, supported by modelled or default data where primary measurements are not available.
- **Align electricity consumption and emission factors to a consistent measurement point**, accounting for relevant transmission and distribution, on-site distribution, battery storage and charging losses.
- **Calculate and report location-based emissions**, using appropriate grid-average electricity emission factors.
- **Where the market-based approach is additionally reported, substantiate the electricity attributes used**, including the contractual instruments and corresponding emission factors.
- **Apply appropriate residual mix emission factors to electricity not covered by qualifying contractual instruments**, where residual mix data are available, to address the potential double claiming of electricity attributes.
- **Document the data sources, assumptions and supporting information** needed for users of the results to understand how the reported emissions were calculated.

A particular focus of this second edition is the **market-based approach**. Contractual procurement of renewable electricity can provide additional information about the electricity associated with BEV charging, but contractual instruments should not automatically be interpreted as evidence of zero transport emissions. Their use requires consideration of the quality of the contractual instrument, the electricity emission factor associated with it, the relevant lifecycle emissions, the treatment of electricity losses and the residual electricity consumption that is not covered by the instrument.

The guidance therefore treats market-based accounting as an additional reporting approach alongside location-based accounting. Both should describe the same underlying transport activity and electricity consumption, but they answer different questions: the location-based result reflects the electricity system supplying the charging location, while the market-based result reflects qualifying contractual electricity attributes associated with that consumption. Reporting the two separately preserves this distinction and makes the basis of the emissions result transparent.

The different use cases in this guidance also show that applying the methodology depends on **where information sits across the transport chain**. A carrier may have detailed vehicle and charging data but limited information about electricity purchased at a third-party charging location. A charge point operator may hold metered electricity and procurement information, while a shipper or logistics service provider may receive only aggregated transport and emissions data. Credible reporting therefore depends not only on calculation rules, but also on the transfer of sufficiently detailed information between these actors.

As BEV freight operations scale, greater consistency in electricity data, contractual information and emission factors will improve the comparability of reported emissions. Some areas remain less developed, particularly the availability of residual mix factors across markets and consistent information on lifecycle emissions associated with contractual electricity products. These limitations should be made transparent rather than resolved through assumptions that could introduce double counting or understate emissions.

Ultimately, the purpose of this guidance is not to create a separate accounting system for electric freight. It is to enable organizations to apply the existing principles of ISO 14083 and the GLEC Framework consistently as the energy source for road freight shifts from fuels to electricity. Transparent treatment of electricity consumption, emission factors and contractual attributes will be essential for ensuring that reported BEV emissions remain **credible, comparable and traceable as electric freight scales**.

Glossary

Actual distance	Distance actually travelled, based on odometer readings or knowledge of the route. It is distinct from transport activity distance.
Battery-electric vehicle (BEV)	A vehicle propelled exclusively by electric motors using electricity stored in an onboard rechargeable battery.
Battery energy storage system (BESS)	A system that stores electrical energy in batteries for later use, including the supply of electricity for vehicle charging.
Behind-the-meter electricity	Electricity generated, stored or managed on the consumer side of the electricity meter.
Behind-the-meter losses	Electricity losses occurring after the electricity meter and before electricity reaches the vehicle battery, where these losses fall within the selected measurement boundary.
Billing information	Electricity consumption data obtained from invoices, charging-service records or other billing statements.
Book and Claim	A chain-of-custody model in which the flow of specified characteristics is administratively separated from the physical flow of material or energy
Chain of custody (CoC)	The process by which specified characteristics of a material, product or energy source are transferred, monitored and controlled through a supply chain.
Charge point operator	Party that operates charging infrastructure and may provide electricity consumption, electricity supply, emission factor and supporting information associated with charging.
Charging activity data	Data describing vehicle charging, including the amount of electricity supplied, charging location and time, and the vehicle or operation associated with the charge.
Charging losses	The difference between electricity supplied to charging equipment and electricity stored in the vehicle battery.
Common measurement point	A defined point in the electricity distribution or charging system to which energy quantities are adjusted to ensure that electricity consumption and associated emission factors are applied on a consistent basis.
Consignment	An identifiable quantity of freight transported as a unit from a consignor to a consignee.
Consumption mix	The mix of electricity consumed within a defined geographic area and time period, accounting for electricity generated within the area and physical electricity imports and exports.
Contractual instrument	A contract, certificate or other recognized instrument used to substantiate specified attributes of purchased electricity.
Contractual instrument electricity emission factor	An electricity emission factor representing the GHG emission attributes attributed to a reporting entity through an eligible contractual instrument.
Contractual instrument purchaser	The party responsible for obtaining, allocating, retiring and documenting contractual instruments used for market-based accounting.
Distance Adjustment Factor (DAF)	A factor expressing the relationship between actual distance and transport activity distance when different distance types are used in the calculation.
Default energy intensity factor	A predefined energy consumption value per unit of transport activity used when measured or modelled energy consumption data are not available.

Electricity emission factor	A factor that relates electricity consumption to the GHG emissions associated with electricity generation and, where applicable, electricity supply.
Emission factor (EF)	A factor that relates an activity or quantity of energy to the GHG emissions resulting from that activity or energy use.
Energy Attribute Certificate (EAC)	A certificate that conveys specified attributes of a defined quantity of electricity generation and can be used within an applicable tracking system.
Energy consumption	Use of energy. In this guidance, the term primarily refers to electricity used for charging battery-electric freight vehicles.
Energy intensity	Energy used per unit of activity, such as kWh per tonne-kilometre.
GHG emission intensity	GHG emissions expressed relative to the activity that caused them, commonly reported for freight transport as g CO2e per tonne-kilometre.
Great Circle Distance (GCD)	The shortest distance between two points on the Earth's surface, taking account of its spherical form.
Green electricity contract or tariff	An electricity supply arrangement under which specified electricity attributes are provided and substantiated through applicable contractual instruments.
Grid emission factor	An electricity emission factor representing the average GHG emissions of the electricity consumption mix within a defined geographic grid and time period, accounting for physical electricity imports and exports where available.
Guarantee of Origin (GO)	A European tracking certificate used to disclose specified attributes of a defined quantity of energy.
Location-based approach	A method to quantify GHG emissions from energy, based on average energy generation GHG emission factors for defined geographic locations, including local, subnational or national boundaries
Market-based approach	a method to quantify the indirect GHG emissions from energy of a reporting organization based on GHG emissions emitted by the generators from which the reporting organization contractually purchases.
Market-based emission factor	An electricity emission factor calculated using the market-based approach, reflecting the applicable contractual instrument electricity emission factors and residual mix emission factors.
Mass balance	A chain-of-custody model in which specified characteristics of inputs are allocated to outputs while the physical inputs may be mixed within a defined system and period.
Metered energy consumption	Electricity consumption measured directly by a meter at a specified point in the charging system.
Modeled energy consumption	Electricity consumption estimated using a calculation model when suitable primary consumption data are unavailable.
On-site generation	Electricity generated at or near the charging location for use behind the meter.
Power plant emission factor	An electricity emission factor representing electricity generated by a specified power plant or generation asset.
Power Purchase Agreement (PPA)	A contract for the purchase of electricity from a specified generation source. Any use for market-based accounting depends on the associated attribute rights and applicable accounting criteria.
Primary data	A quantified value obtained from direct measurement or from a calculation based on direct measurements.

Renewable Energy Certificate (REC)	A tracking certificate used in specified markets to convey the attributes of a defined quantity of renewable electricity generation.
Residual mix emission factor	An emission factor representing electricity attributes remaining after claimed or tracked generation attributes have been removed from the calculation.
Secondary data	Any data that are not primary data. Secondary data include modeled data and default data.
Shortest Feasible Distance (SFD)	The shortest practical route after considering operating constraints such as road access, vehicle restrictions and other relevant conditions.
Supplier-specific emission factor	An electricity emission factor reported for a specified electricity supplier, tariff or product.
Tank-to-wheel emissions (TTW)	GHG emissions from converting the energy carrier into propulsion energy during vehicle operation.
Transmission and distribution losses	Electricity lost while being transported through transmission and distribution networks before reaching the consumer’s meter.
Transport activity	Quantification of freight moved, normally expressed in tonne-kilometres as mass transported multiplied by transport activity distance.
Transport activity distance	The distance used to quantify transport activity. SFD or GCD are required by ISO 14083; actual distance is treated separately where required.
Transport chain	The sequence of transport operations and hub operations used to move goods from origin to destination.
Transport Chain Element (TCE)	One element of a transport chain consisting of a transport operation or a hub operation.
Transport operation	Operation of a vehicle for the purpose of moving freight.
Transport Operation Category (TOC)	A grouping of transport operations that share similar characteristics and can be used to organize calculations and determine representative emission intensities.
Uncovered electricity	The share of electricity consumption for which no qualifying contractual instrument has been allocated under the market-based approach.
Vehicle telematics data	Data recorded or transmitted by onboard vehicle systems, including electricity consumption, distance and operating information.
Virtual Power Purchase Agreement (VPPA)	A financial agreement between an electricity generator and purchaser that conveys specified electricity attributes without requiring physical delivery of the electricity to the purchaser.
Well-to-tank emissions (WTT)	GHG emissions from production of energy inputs through supply of the energy carrier to the vehicle. In this guidance, these are also termed energy provision GHG emissions.
Well-to-wheel emissions (WTW)	GHG emissions across the full energy-carrier life cycle, comprising WTT and TTW emissions.

Abbreviations

Abbreviation	Term
BEV	Battery-electric vehicle
BESS	Battery energy storage system
CDP	Carbon Disclosure Project
CoC	Chain of custody
CO2e	Carbon dioxide equivalent
CPO	Charge point operator
DAF	Distance Adjustment Factor
EAC	Energy Attribute Certificate
EF	Emission factor
eMSP	Electric mobility service provider
EPA	Environmental Protection Agency
GCD	Great Circle Distance
GHG	Greenhouse gas
GLEC	Global Logistics Emissions Council
GO	Guarantee of Origin
GREET	Greenhouse gases, Regulated Emissions, and Energy use in Technologies
HBEFA	Handbook Emission Factors for Road Transport
HOC	Hub Operation Category
IEA	International Energy Agency
ISO	International Organization for Standardization
LSP	Logistics service provider
MBM	Market-based measures
NREL	National Renewable Energy Laboratory
PPA	Power Purchase Agreement
REC	Renewable Energy Certificate
REGO	Renewable Energy Guarantee of Origin
SBTi	Science Based Targets initiative
SFC	Smart Freight Centre
SFD	Shortest Feasible Distance
T&D	Transmission and distribution
TCE	Transport Chain Element
TMS	Transport management system
TOC	Transport Operation Category
TTW	Tank-to-wheel
WTT	Well-to-tank
WTW	Well-to-wheel

Units

Unit	Meaning
g CO2e	grams of carbon dioxide equivalent
kg CO2e	kilograms of carbon dioxide equivalent

kWh	kilowatt-hour
MJ	megajoule
km	kilometre
t	tonne
tkm	tonne-kilometre

Application of ISO 14083 and the GLEC Framework to Battery-Electric Freight Operations:
Guidance on Location-Based and Market-Based Electricity Accounting

25 November 2026

© Smart Freight Centre 2026

Suggested citation: Smart Freight Centre "Application of ISO 14083 and the GLEC Framework to Battery-Electric Freight Operations: Guidance on Location-Based and Market-Based Electricity Accounting" 2026

This publication may be reproduced in whole or in part in any form for educational or non-profit purposes without special permission from the copyright holder, provided acknowledgement of the source is made. Smart Freight Centre would appreciate receiving a copy of any publication that uses Title as a source. No use of this publication may be made for resale or for any other commercial purpose whatsoever, without prior permission in writing from Smart Freight Centre.

Disclaimer
The views expressed in this publication are those of Smart Freight Centre and staff, consultants and management, and do not necessarily reflect the views of the Board of Trustees of Smart Freight Centre. Smart Freight Centre does not guarantee the accuracy of the data included in this publication and does not accept responsibility for consequence of their use.

Acknowledgements

Tharsis Teoh of Smart Freight Centre was the lead author of this report. Adjoka Nartey of Smart Freight Centre jointly led the Road Working Group, with Maren von Anshelm of P&G serving as the 2026 Road Working Group Modal Champion.

We thank the members of the EV Book and Claim Road Working Group for contributing their time, expertise and practical experience to the development of this guidance. We also thank Smart Freight Centre colleagues Alan Lewis, Bruna Rodrigues, Gabriel von Müller, Marcus Lomax, Mehul Khandelwal, Patric Pütz, Teresa Biliato and Violetta Matzoros for their extensive review and discussion throughout the drafting process.

The views and recommendations presented in this guidance are those of Smart Freight Centre and do not necessarily represent the views of individual Working Group members or their organizations. Participation in the Working Group or inclusion in these acknowledgements does not constitute endorsement of the guidance.

Smart Freight Centre (SFC) is a globally active non-profit organization for climate action in the freight sector. Our goal is to mobilize the global logistics ecosystem, in particular our members and partners, in tracking and reducing its greenhouse gas emissions. We accelerate the reduction of logistics emissions to achieve a zero-emission global logistics sector by 2050 or earlier, consistent with 1.5° pathways.

Contact
Smart Freight Centre
Keizersgracht 562, 1017 EM, Amsterdam, Netherlands
P.O. Box 11772, 1001 GT, Amsterdam, Netherlands
www.smartfreightcentre.org
info@smartfreightcentre.org